Accessories and Complements

TESA

ASSA ABLOY



Hinges - Stainless steel AISI316, 304 and 201

Hinges

BS EN 1935 Certified High Performance grade 13
Stainless Steel Double Ball Bearing Hinges

High performance hinge with extra deep thrust bearing for high load and long life. Stainless steel fixed pin.

- Certified to BS EN 1935 Grade 13
- CE Marked - Certified.
- Approved for Fire-rated doors.
- Very High Anti-Corrosive to BS EN Grade 4
- Template drilled screw holes.
- For timber door/metal frame application half wood/half machine countersunk screws.

1121

FIRE TESTED

ANTI CORROSIVE

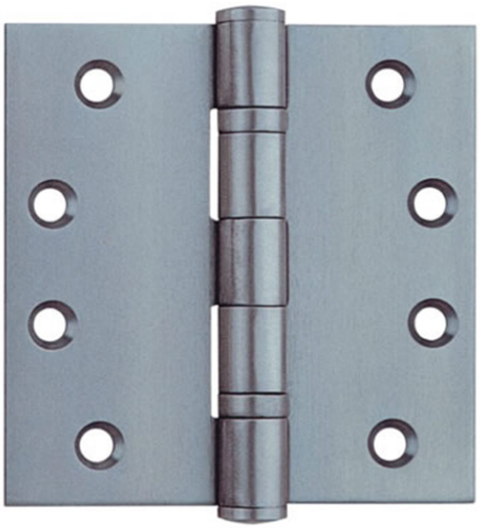

4	7	6	1*	1	4	0	13

BS EN 1935 Certified High Performance

BS EN 1935 Classification of Hinges

Hinge	Usage	Test cycles mass	Door
1	Window	10 000	10 kg
2	Window	10 000	20 kg
3	Window/Door	25 000	20 kg
4	Door	200 000	20 kg
5	Window	10 000	40 kg
6	Window/Door	25 000	40 kg
7	Door	200 000	40 kg
8	Window	10 000	60 kg
9	Window/Door	25 000	60 kg
10	Door	200 000	60 kg
11	Door	200 000	80 kg
12	Door	200 000	100 kg
13	Door	200 000	120 kg
14	Door	200 000	160 kg

The pack includes:

» pair, with countersunk fixing screws.

Finish
» IS316

Product code	Finish	Dimensions
BISCFCE433IS16	IS 316	102x76x3mm
BISCFCE443IS16	IS 316	102x102x3mm

Finish
» IS304

Product code	Finish	Dimensions
BISCFCE433IS	IS 304	102x76x3mm
BISCFCE443IS	IS 304	102x102x3mm

Finish
» IS201

Product code	Finish	Dimensions
BISCFCE433IS01	IS 201	102x76x3mm
BISCFCE443IS01	IS 201	102x102x3mm

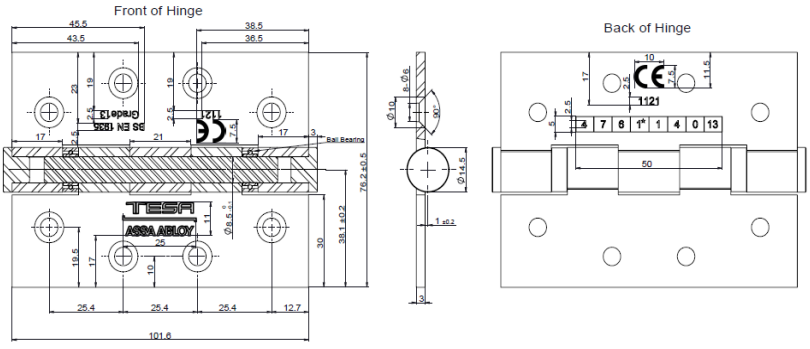

102x76x3mm

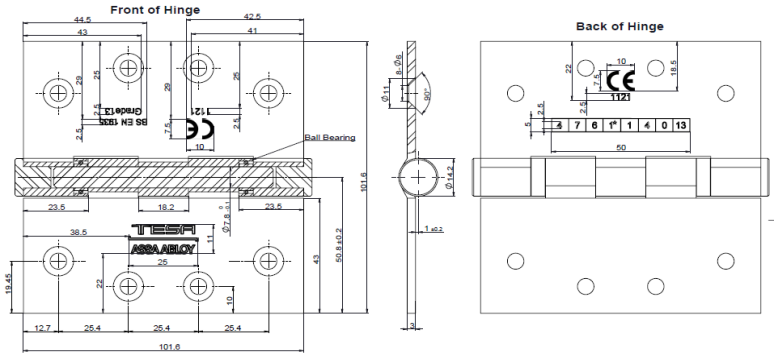

102x102x3mm

Solid Lever handles Stainless AISI 304

ISOS Stainless AISI 304

The pack with a rosette includes

» A set of handles with an internal plate and a cover, a 8x105 mm spindle, 4 coach screws, 2 through bolts, 2 bolts and an Allen key.



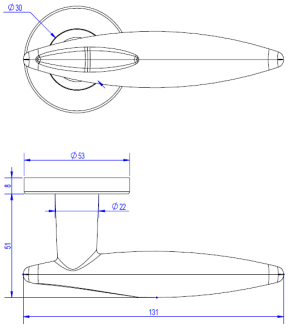

Rosette	Product code	Finish
ROSETTE	MIS5R800SSIS	SSS Grade 304

NOVA Stainless AISI 304

The pack with a rosette includes

» A set of handles with an internal plate and a cover, a 8x105 mm spindle, 4 coach screws, 2 through bolts, 2 bolts and an Allen key.



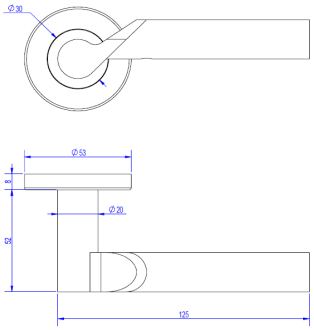

Rosette	Product code	Finish
ROSETTE	MNV5R800SSIS	SSS Grade 304

OASIS Stainless AISI 304

The pack with a rosette includes

» A set of handles with an internal plate and a cover, a 8x105 mm spindle, 4 coach screws, 2 through bolts, 2 bolts and an Allen key.



Rosette	Product code	Finish
ROSETTE	MOA5R800SSIS	SSS Grade 304

WIND Stainless AISI 304

The pack with a rosette includes

» A set of handles with an internal plate and a cover, a 8x105 mm spindle, 4 coach screws, 2 through bolts, 2 bolts and an Allen key.



Rosette	Product code	Finish
ROSETTE	MWI5R800SSIS	SSS Grade 304

Solid Lever handles Stainless AISI 304

MARCH Stainless AISI 304

The pack with a rosette includes

» A set of handles with an internal plate and a cover, a 8x105 mm spindle, 4 coach screws, 2 through bolts, 2 bolts and an Allen key.

Rosette	Product code	Finish
ROSETTE	MMH5R800SSIS	SSS Grade 304



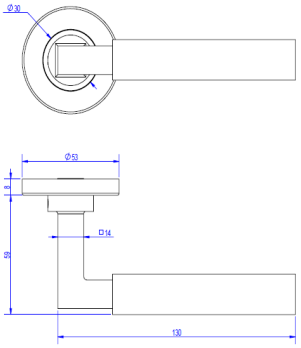

ARENA Stainless AISI 304

The pack with a rosette includes

» A set of handles with an internal plate and a cover, a 8x105 mm spindle, 4 coach screws, 2 through bolts, 2 bolts and an Allen key.

Rosette	Product code	Finish
ROSETTE	MAR5R800SSIS	SSS Grade 304



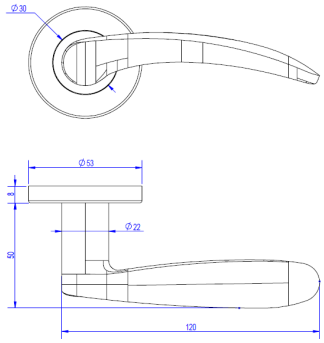

FUNXTION Stainless AISI 304

The pack with a rosette includes

» A set of handles with an internal plate and a cover, a 8x105 mm spindle, 4 coach screws, 2 through bolts, 2 bolts and an Allen key.

Rosette	Product code	Finish
ROSETTE	MFU5R800SSIS	SSS Grade 304



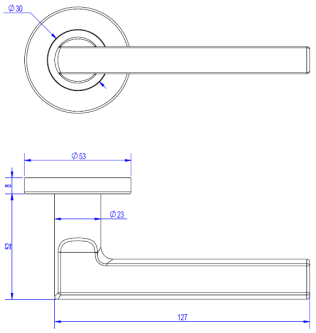

MARINA Stainless AISI 304

The pack with a rosette includes

» A set of handles with an internal plate and a cover, a 8x105 mm spindle, 4 coach screws, 2 through bolts, 2 bolts and an Allen key.

Rosette	Product code	Finish
ROSETTE	MMA5R800SSIS	SSS Grade 304



Solid Lever handles Stainless AISI 304

OLA Stainless AISI 304

The pack with a rosette includes

» A set of handles with an internal plate and a cover, a 8x105 mm spindle, 4 coach screws, 2 through bolts, 2 bolts and an Allen key.

Rosette	Product code	Finish
ROSETTE	MOL5R800SSIS	SSS Grade 304



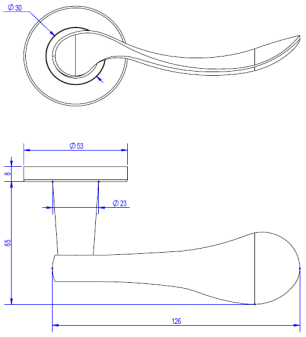

YAS Stainless AISI 304

The pack with a rosette includes

» A set of handles with an internal plate and a cover, a 8x105 mm spindle, 4 coach screws, 2 through bolts, 2 bolts and an Allen key.

Rosette	Product code	Finish
ROSETTE	MYA5R800SSIS	SSS Grade 304



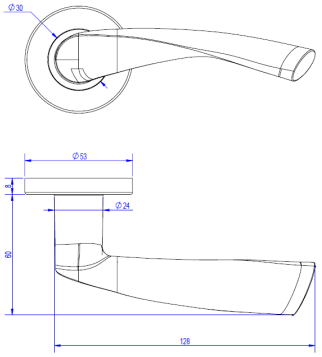

SPA Stainless AISI 304

The pack with a rosette includes

» A set of handles with an internal plate and a cover, a 8x105 mm spindle, 4 coach screws, 2 through bolts, 2 bolts and an Allen key.

Rosette	Product code	Finish
ROSETTE	MSP5R800SSIS	SSS Grade 304



Institutional stainless AISI 304 pull handle

Solid Type Stainless pull handles

Maximum resistance and durability. Design and ergonomics. These are the most important features for pull handles oriented towards the institutional segment. They will have to endure intensive use, due to the high traffic they are subject to, and meet functionality criteria such as ease of evacuation, etc. They must remain unaffected by any climatic conditions, both indoors and outdoors. But they must also fit in aesthetically with the features of the building, adapting to each project with total precision. TESA brings you a magnificent collection of handles oriented towards the institutional segment, made in stainless steel.

General features

» Simple or double installation, M8x70mm fixing screws included.
» For doors made of wood, glass, metal or PVC.

Materials and finishes

» AISI304 Stainless steel.

Fixations

» Simple fixation.
» Double fixation.

Sizes

» Chech for special sizes and diametres.
» The length of the pull handle correspons to the distance between axis



Product code	Model	Description	Type
TR19150SSIS	Simple	Straight unitary pull handle 150x19AISI304	solid
TR19225SSIS	Simple	Straight unitary pull handle 225x19AISI304	solid
TR19305SSIS	Simple	Straight unitary pull handle 305x19AISI304	solid
DTR19150SSIS	Double	Straight unitary pull handle 150x19AISI304	solid
DTR19225SSIS	Double	Straight unitary pull handle 225x19AISI304	solid
DTR19305SSIS	Double	Straight unitary pull handle 305x19AISI304	solid
TR22150SSIS	Simple	Straight unitary pull handle 150x22AISI304	solid
TR22225SSIS	Simple	Straight unitary pull handle 225x22AISI304	solid
TR22305SSIS	Simple	Straight unitary pull handle 305x22AISI304	solid
DTR22150SSIS	Double	Straight unitary pull handle 150x22AISI304	solid
DTR22225SSIS	Double	Straight unitary pull handle 225x22AISI304	solid
DTR22305SSIS	Double	Straight unitary pull handle 305x22AISI304	solid
TR19150HWIS	Simple	Straight unitary pull handle 150x19AISI304	hollow
TR19225HWIS	Simple	Straight unitary pull handle 225x19AISI304	hollow
TR19305HWIS	Simple	Straight unitary pull handle 305x19AISI304	hollow
DTR19150HWIS	Double	Straight unitary pull handle 150x19AISI304	hollow
DTR19225HWIS	Double	Straight unitary pull handle 225x19AISI304	hollow
DTR19305HWIS	Double	Straight unitary pull handle 305x19AISI304	hollow

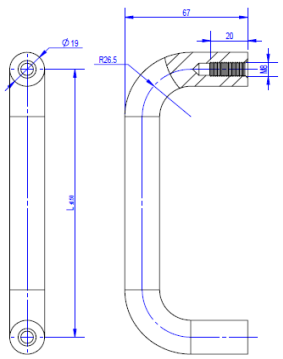

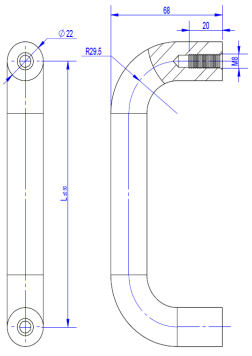

Accessories - Institutional stainless AISI 304 plates

Push plates

The pack includes:

» fixing screws.

Finish
» IS304

Product code	Finish	Dimensions
PCCIEGAIS305100	IS	305x100x1.5mm
PCCIEGAIS305150	IS	305x150x1.5mm



Kick plates

The pack includes:

» fixing screws.

Finish
» IS304

Product code	Finish	Dimensions
PCCIEGAIS800150	IS	800x150x1.5mm
PCCIEGAIS100020	IS	1000x200x1.5mm
PCCIEGAIS100080	IS	1000x800x1.5mm

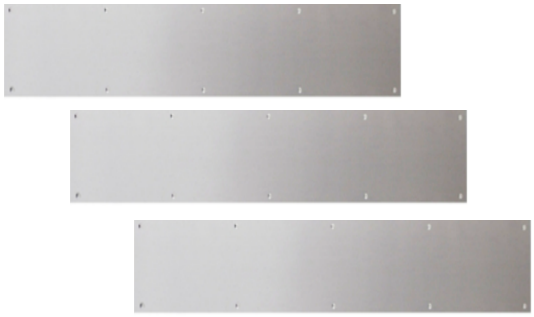

Sign plates

The pack includes:

» fixing screws.

Finish
» IS304

Product cod	Finish	Dimensions
VISUALHOMBREIS	IS	D76x1.5mm ENGRAVED; MALE
VISUALMUJERIS	IS	D76x1.5mm ENGRAVED; FEMALE
VISUALMINUSIS	IS	D76x1.5mm ENGRAVED; HANDICAPPED
VISUALUNISEXIS	IS	D76x1.5mm ENGRAVED; UNISEX



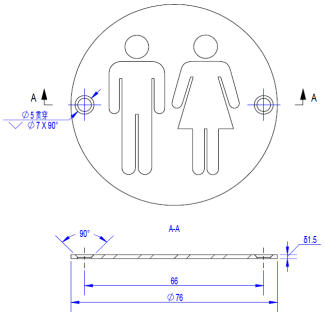

Institutional stainless AISI 304 handle
complements

Key holes

The pack includes:
» A set with support pieces and covers.
» 4 coach screws.

Finish
» IS304



Product code	Finish
MB0RBOMSSIS	IS

Thumb turns

The pack includes:
» A set with support pieces and covers.
» 4 coach screws.

Finish
» IS304

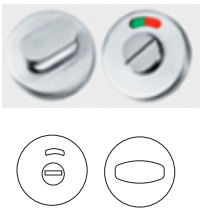

Product code	Finish
MB0RBEMESSIS	IS

Product code	Finish
MB0RBEMESSMINIS	IS



Flush ring Socket pull

The pack includes:
» A set with support pieces and covers.
» 4 coach screws.

Finish
» IS304



Product code	Finish
MB0REMEOCIS	IS

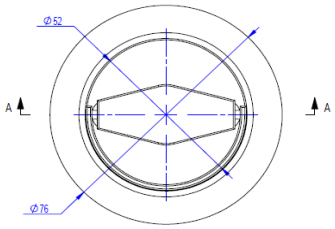

Flush pull handle - Oval

The pack includes:
» 4 coach screws.

Finish
» IS304

Product code	Finish
TIRUNELOCS	IS



Cylinder pull - Europrofile

The pack includes:
» 4 wood screws.

Finish
» IS304



Product code	Finish
TIRADORB0MIS	IS

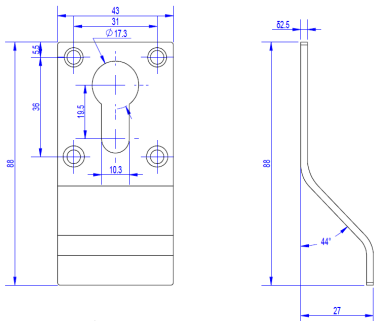

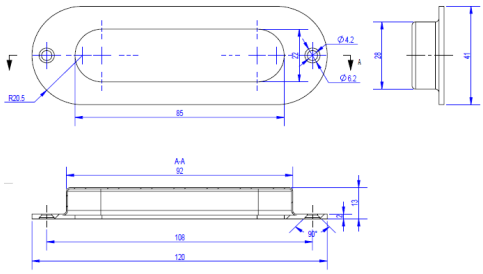

Accessories - Institutional stainless AISI 304 bolts and socket

Flushbolts - Timber door



The pack includes:

» pair, with fixing screws.

Finish
» IS304

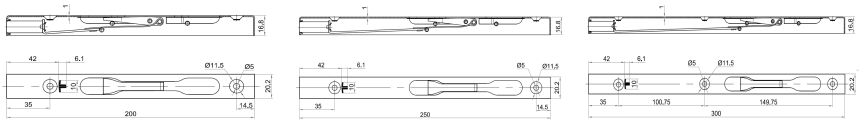

Product code	Finish	Dimensions
DB3/4SS8IS	IS	3/4 width 8 inches
DB3/4SS10IS	IS	3/4 width 10 inches
DB3/4SS12IS	IS	3/4 width 12 inches

Flushbolts - Steel door



The pack includes:

» pair, with fixing screws.

Finish
» IS304

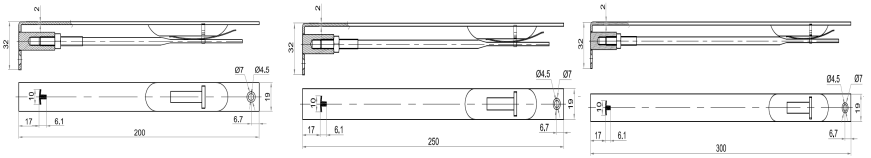

Product code	Finish	Dimensions
DB19SS8IS	IS	19mm - 8 inches
DB19SS10IS	IS	19mm - 10 inches
DB19SS12IS	IS	19mm - 12 inches

Extension flushbolts



The pack includes:

» pair, with fixing screws.

Finish
» IS304

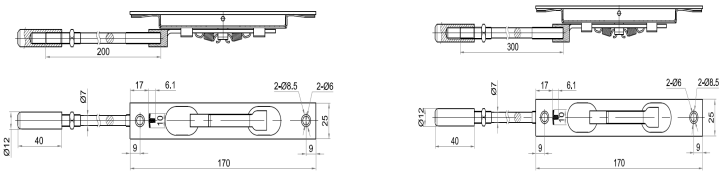

Product code	Finish	Dimensions
DB3/4LSS8IS	IS	3/4 width 8 inches
DB3/4LSS10IS	IS	3/4 width 10 inches

Dust proof socket



The pack includes:

» with fixing screws.

Finish
» IS304

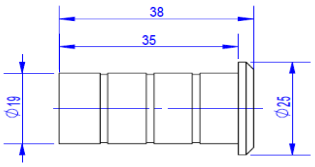

Product code	Finish	Dimensions
GUARDAPOLIS	IS	D25X38X13.5 (inner hole)

Accessories - Institutional stainless AISI 304 stopper

Half-dome door stopper

The pack includes:

» rubber plug with fixing screws.

Finish
» IS304

Product code	Finish
TOPINOX45IS	IS



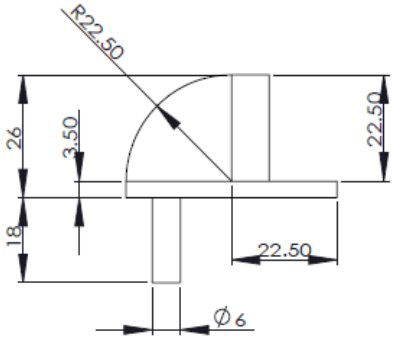

Full-dome door stopper

The pack includes:

» rubber plug with fixing screws.

Finish
» IS304

Product code	Finish
TOPINOXRIS	IS



Wall door stopper

The pack includes:

» rubber plug with fixing screws.

Finish
» IS304

Product code	Finish
TOPINOX4320IS	IS



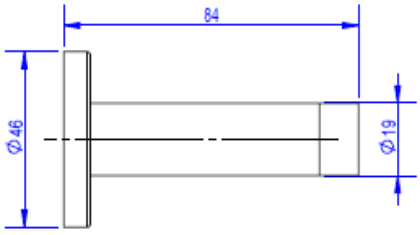

Coath hook w/ rubber buffer

The pack includes:

» rubber plug with fixing screws.

Finish
» IS304

Product code	Finish
TOPERCHAIS	IS



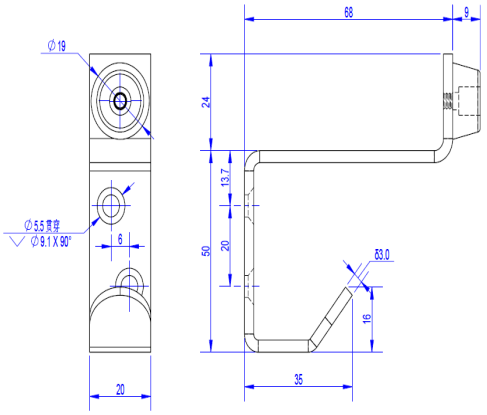



ASSA ABLOY

Talleres de Escoriaza, S.A.U.
Barrio Ventas, 35 • E-20305 Irun • SPAIN
Tel.: +34 943 669 100 • Fax: +34 943 622 189
www.tesa.es

ASSA ABLOY is the global leader in door opening solutions,
dedicated to satisfying end-user needs for security, safety and convenience.