Ironmongery & Security Hardware
Trade Catalogue 2010

Ironmongery & Security Hardware

Trade Catalogue 2010



Door Closers



Exit Hardware



Security



Door Furniture



Access Control

Briton
Legge
CISA
KRYPTONITE

Ingersoll Rand
Security Technologies

Ingersoll Rand
Security Technologies

Protecting people, property and assets is an ongoing, ever changing and vital responsibility in all areas of modern life. Ingersoll Rand Security Technologies delivers innovative access and security solutions to assist building owners, specifiers and contractors in meeting this responsibility.

We are a leading global provider of products and services that make environments safe and secure without inhibiting access or working capability. Our product portfolio includes electronic and biometric access control systems, time and attendance and personnel scheduling systems, mechanical locks and portable security together with door closers and exit devices, steel doorsets, automated openings and architectural hardware.

Our industry wide capabilities and expertise mean we are well placed to tailor integrated solutions for any project from doors and hardware to full access control and the software for people management.

We also help you meet the requirements of the UK Disability Discrimination Act (DDA) so that people can enjoy ease of access to and within your premises without compromising on security.

This catalogue is dedicated to providing an easy to use guide to our trade range of architectural hardware and entry level access control products. It encompasses the Briton brand of door closers, exit devices, door furniture and lockcases. Also included are Legge lever locks and latches and CISA padlocks and portable security products.

The catalogue is designed to provide you with the key information you require on each of the products as well as to provide you with useful information to help you select the products you need for your particular application. If you need further details on any of the product lines you can download full specification brochures from our website at **www.security.ingersollrand.co.uk** or for technical queries you can telephone our dedicated Technical Helpline on **0800 834102**.



Contents

DOOR CLOSERS

Mechanical 3
Electromagnetic 11

EXIT HARDWARE 13

SECURITY PRODUCTS

Residential

Lever Locks and Latches 19
Nightlatches & Rim Locks 31

Commercial

Cylinder Lockcases 35
Cylinders 42

Portable Security 53

DOOR FURNITURE 61

ACCESS CONTROL 69

POINT OF SALE 77

Glossary of Terms 81
Finishes 83
Index 84





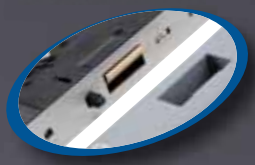





Door Closers

The Briton overhead door closer range provides a multi-level approach to door closing solutions to suit all projects, door applications and budgets. From the simplicity of a mechanical non-fire door closer for basic functionality, to a microprocessor controlled low energy operator for special applications e.g. for doors required to satisfy Part M of the Building Regulations, there are Briton products to meet your needs.



Ingersoll Rand
Security Technologies

Which Door Closer?

Select the correct door closer for your application

Briton

Functionality & Durability

Low Usage	Medium Usage		High Usage		All Purpose	Electromagnetic
2,000-15,000 cycles p.a.	5,000-100,000 cycles p.a.		100,000-500,000 cycles p.a.		including heavy duty	All applications with electrical hold open option
Briton 121CE	No Backcheck: Briton 1110	Backcheck: Briton 1120B	Fixed Strength: Briton 2003	Adjustable Strength: Briton 2003V	Briton 2100 Range	Briton 996 Electromagnetic



All the door closers described are fully CE certified and CE marked unless stated. We would recommend that the use of a CE marked door closer is the best way of ensuring the product you are using is fit for purpose and meets all legal requirements, particularly when used on fire doors. This selector is designed to help you choose the right closer based on the functionality required and the type of usage it will endure.

Guide to Terminology

CE Mark Explained

Door closers are an important link in the control of fire and smoke and their usage can help save lives. From October 2004 Door Closer standards, BS EN 1154 and EN 1155 became harmonised across Europe and are now the required standards to test to in order to attain CE marking for controlled door closing devices.

Door Strength

To determine which closer size you require, please use the following table

Closer Size	Door Width	Door Weight
1	750mm	20kg
2	850mm	40kg
3	950mm	60kg
4	1100mm	80kg
5	1250mm	100kg
6	1400mm	120kg



TIMBER DOORS STEEL DOORS

certifire

Finishes

All products are available in a powder coated silver finish as standard. Metallic and coloured finishes are also available.

For a full finish chart see Page 83.

Disability Discrimination Act (DDA)

Under Part III of the Disability Discrimination Act 1995, service providers are required to make "reasonable adjustments to the physical features of their premises to overcome barriers to access".

For door applications British Standard BS8300 (Amendment No 1 – 2005) recommends a maximum initial opening force of 30 Newton. It is possible to meet the requirements of the revised BS8300 for a door fitted with mechanical door closers, but the only way to be 100% sure that the requirements are met is by the use of powered solutions such as low energy operators or electro-magnetic hold open and swing free devices. This is because a high performance mechanical door closer which meets the new criteria in laboratory test conditions is not in itself a guarantee that the fully installed doorset will conform. Other factors, such as resistance from hinges, latches, door seals and air pressure, may render the doorset non-compliant.

Products that can be used to help meet the DDA requirements are indicated with a wheelchair symbol. However for further information on their suitability for your particular application we recommend that you contact our Technical Department on 0800 834102 or visit www.security.ingersollrand.co.uk and download a copy of Doc M brochure.

Backcheck Explained

In-built cushioning during opening cycle to minimise the risk of personal injury and damage to adjacent walls.

Delayed Action Explained

Delays the closing cycle to allow slow moving pedestrians to pass through unhindered by the closing door.

FITTING APPLICATION GUIDE

Overhead door closers can generally be fixed in one of three ways depending on the location they are being fitted. Most Briton door closers are supplied Tri-packed meaning that they contain the necessary brackets and fixings to enable them to be fitted in any of the applications below:

Regular fixing
Mounted on the pull face of the door



Transom fixing
Mounted on the transom on the push side of the door



Parallel fixing
Mounted on the push side of the door



TOP TIP

When fitting in Parallel applications on fire doors it is important to check CE compliance.
For advice on your particular application call our Technical Services Hotline on 0800 834102.

BRITON 101 CONCEALED JAMB CLOSER

- Suitable for uncontrolled door closing of light-medium weight internal doors
- Suitable for door weights up to 50kg (2 closers can be fitted to doors over 50kg)
- Tested to BS476 for $^1/_2$ hour fire doors. However, we would recommend the use of fully CE marked door controls on fire doors.

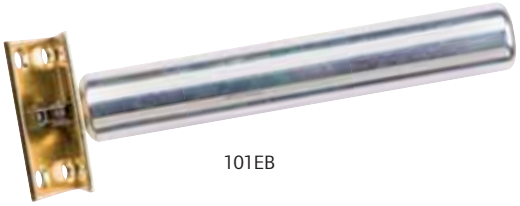

101EB

NOT RECOMMENDED FOR FIRE DOOR USE

Code	Description	Finish	Barcode
101	Concealed jamb closer	EB	5 027968 234372

BRITON 121CE

The Briton 121CE compact overhead door closer is suitable for the most popular door sizes. It has all the characteristics of performance, durability, functionality and quality that specifiers have come to expect from a Briton door control.

- Cost effective door closer
- Successfully tested to recommendations of EN1154 & EN1634
- Fixed power size 3
- Supplied with fixings for regular and transom mounting only
- Fig 66 bracket and stand open arm are available as options.
- Stand open options are not CE marked or suitable for fire doors.

Finishes

Briton 121CE door closers are available in 4 spray painted finishes, and supplied with matching arms and brackets.



121CE

CE certifire CF390

10 YEAR GUARANTEE

2 HOURS FIRE RATING

TIMBER DOORS

Code	Description	Finish	Barcode
121CE	Door Closer Fixed Size 3 for Fire Doors	SES Silver	5 050640 018434
121CE	Door Closer Fixed Size 3 for Fire Doors	GES Gold	5 050640 018472
121CE	Door Closer Fixed Size 3 for Fire Doors	BES Brown	5 050640 020321
121CE	Door Closer Fixed Size 3 for Fire Doors	WHS White	5 050640 018489

BRITON 1100 SERIES TRIMPLATE STYLE OVERHEAD DOOR CLOSER

COMMON FEATURES OF THE RANGE

The Briton 1100 series trimplate style closer is designed to provide a mid-range product with choice of the most popular options, in a concise, cost-effective package.

- CE marked
- Successfully tested to recommendations of EN1154 & EN1634
- Certifire Approved CF388
- Suitable for fire doors – tested to 2 hours
- Tri-packed for all standard fitting applications
- Cover option available

Finishes

The Briton 1100 Series is available as standard in a silver (SES) or gold (GES) sprayed finish with matching arms and bracket (or slide track). Cover variants are also available in metallic finishes with matching arms. A rounded 'softline' specification cover is also available.

Arms

All covered variants have a flatform arm as standard. All trimplate variants have screw thread arms as standard.

Hold open arms are available on request, but must NOT be used on fire doors.

BRITON 1110

- Template adjustable for power sizes 2-4 making it suitable for most standard door applications



Briton 1110



Briton 1110.C

CE certifire CF388

10 YEAR GUARANTEE

2 HOURS FIRE RATING

TIMBER DOORS

Code	Description	Finish	Barcode
1110	Template Adjustable Sizes 2-4 Trimplate c/w Screw Thread Arm	SES	5 050640 018397
1110.C	Template Adjustable Sizes 2-4 Square Cover c/w Flatform Arm	SES	5 050640 023131

BRITON 1120B

- Wind through adjustable for power sizes 2-4 making it suitable for most standard door applications
- Adjustable strength backcheck helps to minimise damage to adjacent walls when door is forcibly thrown open



1120B



1120B.C

CE certifire CF388

10 YEAR GUARANTEE

2 HOURS FIRE RATING

TIMBER DOORS

Code	Description	Finish	Barcode
1120B	Adjustable Sizes 2-4 Trimplate c/w B/C & Screw Thread Arm	SES	5 050640 018403
1120B.C	Adjustable Sizes 2-4 Classic Cover c/w B/C & Flatform Arm	SES	5 050640 023186

BRITON 1130B

- Wind through adjustable for power sizes 2-6 making it suitable for most door applications including doors up to 1400mm wide and 120kg in weight
- Adjustable strength backcheck helps to minimise damage to adjacent walls when door is forcibly thrown open



1130B



1130B.C

CE certifire CF388

10 YEAR GUARANTEE

2 HOURS FIRE RATING

TIMBER DOORS

Code	Description	Finish	Barcode
1130B	Adjustable Sizes 2-6 Trimplate c/w B/C and Screw Thread Arm	SES	5 050640 021366
1130B.C	Adjustable Sizes 2-6 Classic Cover c/w B/C and Flatform Arm	SES	5 050640 023285

BRITON 1110.T

- Track variant ideal for use in areas where a standard arm may be open to abuse
- Fixed power size 3 to suit most standard door applications



1110.T

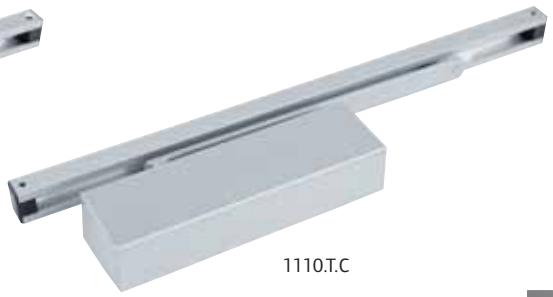

1110.T.C

CE certifire CF388

10 YEAR GUARANTEE

2 HOURS FIRE RATING

TIMBER DOORS

Code	Description	Finish	Barcode
1110.T	Fixed Strength Track Size 3 Trimplate	SES	5 050640 021311
1110.T.C	Fixed Strength Track Size 3 Classic Cover	SES	5 050640 023230

BRITON 2000 SERIES OVERHEAD DOOR CLOSERS

COMMON FEATURES OF THE RANGE

The Briton 2000 Series offers adjustable and fixed power sizes providing a comprehensive package of solutions to suit the most popular door sizes.

- CE marked
- Fully certified to EN1154 & EN1634
- Certifire Approved CF111
- Best selling Square cover
- Easy to install
- Tri-packed for all standard fitting applications
- Track arm variant suitable for use in areas where a standard arm may be open to abuse

Finishes

Briton 2000 Series door closers are available in a wide selection of metallic and coloured finishes which fall into 3 categories:

- Powder coated coloured finishes , including matches to the Normbau range of coloured nylon hardware
- Metallic finishes
- Solid metal polished finishes

Arms

All projecting arm closers are supplied as standard with arms and closer body in a matching finish. All track arm closers are supplied with matching arm and track with the exception of PAS finish which is supplied with Silver (SES) track.

Hold open arms are available on request, but must NOT be used on fire doors.

BRITON 2003 & 2004

- **Briton 2003** - Fixed strength size 3 door closer to suit most popular door sizes (up to 950mm wide and 60kg in weight)
- **Briton 2004** - Fixed strength size 4 door closer for doors up to 1100mm and 80kg
- **Briton 2003T** - Fixed strength size 3 track arm door closer

CE certifire CF111



2003

10 YEAR GUARANTEE | 2 HOURS FIRE RATING TIMBER DOORS | 4 HOURS FIRE RATING STEEL DOORS

Code	Description	Finish	Barcode
2003	Fixed Size 3	SES	5 050640 006141
2004	Fixed Size 4	SES	5 050640 007018
2003.T	Fixed Size 3 c/w Single Arm Non-Projecting	SES	5 050640 006431

TOP TIP

The Briton 2003 is CE marked in Regular or Transom fitting applications. If fitting in Parallel application on a fire door use Briton 2004 or Briton 2003V.

BRITON 2003V

- Wind through adjustable for easy on-site strength adjustment for door sizes 1-4 (Factory Set at Size 3)
- Adjustable backcheck helps prevent damage to doors and walls

CE certifire CF111



2003V

10 YEAR GUARANTEE | 2 HOURS FIRE RATING TIMBER DOORS | 4 HOURS FIRE RATING STEEL DOORS

Code	Description	Finish	Barcode
2003V	Adjustable Size 1-4 c/w B/C	SES	5 050640 024138

BRITON 2100 SERIES MULTI-PURPOSE OVERHEAD DOOR CLOSERS

COMMON FEATURES OF THE RANGE

The Briton 2100 Series of door controls provides a multi-level door closing solution to suit all projects, door applications and budgets.

- CE marked (except 2130BD)
- Fully certified to EN1154 & EN1634 (except 2130BD)
- Certifire Approved CF111
- Easy to install – featuring unique Accufit installation system
- Suitable for fire doors – tested up to 2 hours
- Tri-packed for all standard fitting applications
- Available with various cover options where specified

Finishes

Briton 2100 series door closers are available in a wide selection of:

- Electroplated metallic finishes
- Powder coated coloured finishes, including matches to the Normbau range of coloured nylon hardware

Arms

All door controls, whether projecting, parallel or track arm variants, are supplied with arms, brackets and/or tracks finished to match the body cover. Projecting arm variants with hold-open are normally supplied with black arms.

Hold open arms are available on request, but must NOT be used on fire doors.

BRITON 2110.L

- Small, stylish and economical
- Template adjustable for power sizes 2-4 making it suitable for most standard door applications



2110.L

CE certifire CF111

10 YEAR GUARANTEE

2 HOURS FIRE RATING TIMBER DOORS

4 HOURS FIRE RATING STEEL DOORS

Code	Description	Finish	Barcode
2110.L	Template Adjustable Size 2-4 c/w L cover	SES	5 050640 007278

BRITON 2120B.L

- Wind through adjustable for power sizes 1-4 making it suitable for most door applications
- Adjustable strength backcheck helps to minimise damage to adjacent walls when door is forcibly thrown open



2120B.L

CE certifire CF111

10 YEAR GUARANTEE

2 HOURS FIRE RATING TIMBER DOORS

4 HOURS FIRE RATING STEEL DOORS

Code	Description	Finish	Barcode
2120B.L	Adjustable Size 1-4 c/w B/C & L cover	SES	5 050640 008435

BRITON 2130B & 2130BD

- Wind through adjustable for power size 2-6 making it suitable for most door applications including doors up to 1400mm wide and 120kg in weight
- Adjustable strength backcheck helps to minimise damage to adjacent walls when door is forcibly thrown open
- 2130BD also features delayed action, allowing slow moving pedestrians to pass through the door unhindered (not CE Compliant)
- Choice of cover options



2130B.L



2130B.C

certifire
CF111

10 YEAR GUARANTEE

2 HOURS FIRE RATING
TIMBER DOORS

4 HOURS FIRE RATING
STEEL DOORS

Code	Description	Finish	Barcode
2130B.C	Adjustable Size 2-6 c/w b/c & C cover	SES	5 050640 010209 >
2130B.L	Adjustable Size 2-6 c/w b/c & L cover	SES	5 050640 010483 >

Code	Description	Finish	Barcode
*2130BD.C	Adjustable Size 2-6 c/w b/c, delayed action & C cover. Non CE	SES	5 050640 011787 >
*2130BD.L	Adjustable Size 2-6 c/w b/c, delayed action & L cover. Non CE	SES	5 050640 012074 >

***2130BD** WITH DELAYED ACTION. NOT SUITABLE FOR FIRE DOOR USE. Not CE marked or Certifire approved

BRITON 2130B.T

- Track variant ideal for use in areas where a standard arm may be open to abuse
- Wind through adjustable for power sizes 2-4 making it suitable for most standard door sizes
- Adjustable strength backcheck helps to minimise damage to adjacent walls when door is forcibly thrown open



2130B.T.C



2130B.T.L

CE

certifire
CF111

10 YEAR GUARANTEE

2 HOURS FIRE RATING

Code	Description	Finish	Barcode
2130B.T.C	Adjustable Size 2-4 Track Fig 30 c/w b/c & C Cover	SES	5 050640 013378 >
2130B.T.L	Adjustable Size 2-4 Track Fig 30 c/w b/c & L Cover	SES	5 050640 009593 >

BRITON ELECTROMAGNETIC DOOR CONTROLS

COMMON FEATURES OF THE RANGE

Linked to the building's alarm system, electro-magnetic door controls eliminate the illegal practice of wedging doors open. This dangerous practice prevents a fire door functioning as it should in stopping the spread of flames and smoke in the event of a fire.

Hold open function enables doors to remain in an open position – ideal for corridors.

- Designed for use on low voltage 24V DC circuits
- CE marked
- Fully certified to EN1154, EN1155 & EN1634 where appropriate

BRITON 503 ELECTROMAGNETIC DOOR HOLDERS

When used in conjunction with a suitable door closing device, fire alarm and detection system, these Briton electromagnetic hold open devices permit fire doors to be held open during normal operation. In the event of fire or smoke detection the units are automatically de-activated and the doors will close under the action of the door closer.

- Fully Compliant with EN 1155
- Built in release/test button to simulate alarm activation in order to check operation on a regular basis

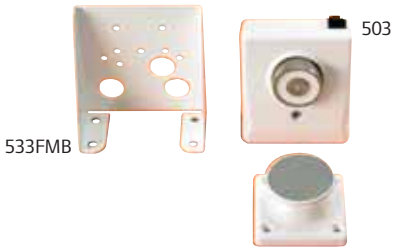

CE

2 HOURS FIRE RATING TIMBER DOORS
2 YEAR GUARANTEE ELECTRICAL
5 YEAR GUARANTEE

Code	Description	Finish	Barcode
503	Contract Wall Magnet	WH	5 050640 020536
533FMB	Floor Mounting Bracket for use with 503 Magnet	WH	5 050640 020543

TOP TIP

Briton electromagnetic hold open devices are suitable for use with overhead door closers and floor springs. To avoid inflicting twisting forces on the door leaf it is recommended that the electromagnetic device is fitted in the same horizontal plane as the closing device (or as close as is practical). Failure to do so can result in the door leaf twisting which can prevent the door from closing properly in an emergency.

BRITON 2130B.TE

- Hold open electromagnetic door closer
- Certifire approved CF111
- Wind through adjustable power sizes 3-4
- Adjustable strength backcheck helps to minimise damage to adjacent walls when door is forcibly thrown open
- Available with 2 cover options


2130B.TE.L


2130B.TE.C

CE certifire CF111

10 YEAR GUARANTEE MECHANICAL
2 YEAR GUARANTEE ELECTRICAL
2 HOURS FIRE RATING TIMBER DOORS
4 HOURS FIRE RATING STEEL DOORS

Code	Description	Finish	Barcode
2130B.TE.L	Electromagnetic hold open, Adjustable Sizes 3-4 c/w B/C & L cover	SES	5 050640 014542
2130B.TE.C	Electromagnetic hold open, Adjustable Sizes 3-4 c/w B/C & C cover	SES	5 050640 014252

BRITON 996

- Can be used either in hold open or free swing mode
- Certifire approved CF109
- Fixed power sizes 3, 4 and 5
- Available for Fig 1 and 61 (standard and transom) or Fig 66 (parallel) fixing – must be ordered accordingly (see table)
- Powder coated finishes are supplied with black arms as standard, matching arms are also available
- Metallic covers are also available with either black or matching arms
- Free-swing function enables the door to move freely – ideal for elderly, young and disabled users



996

CE

certifire
CF109

10 YEAR GUARANTEE
MECHANICAL

2 YEAR GUARANTEE
ELECTRICAL

2 HOURS FIRE RATING
TIMBER DOORS

Code	Description	Finish
9963/01	Fixed Size 3 Electromagnetic HO/Free Swing Fig 1 & 61	SES
9963/66	Fixed Size 3 Electromagnetic HO/Free Swing Fig 66	SES
9964/01	Fixed Size 4 Electromagnetic HO/Free Swing Fig 1 & 61	SES
9964/66	Fixed Size 4 Electromagnetic HO/Free Swing Fig 66	SES
9965/01	Fixed Size 5 Electromagnetic HO/Free Swing Fig 1 & 61	SES
9965/66	Fixed Size 5 Electromagnetic HO/Free Swing Fig 66	SES

TOP TIP

Fire alarm relays may be required with some alarm systems.
Please contact our technical department on 0800 834 102 for more information

FSR TRANSFORMERS

For use with fire/smoke electro-magnetic door holders where 24V DC power is not available for the continuous rating required.

Code	Description
FSR/4B	Transformer Rectifier (Relay not included). Up to 3 units
FSR/20B	Transformer Rectifier (Relay not included). Up to 15 units
FSR/50B	Transformer Rectifier (Relay not included). Up to 38 units

Exit Hardware

The Briton exit hardware range provides products suitable for single and double door applications for both public and non public buildings.

When lives may depend on a exit device Briton feel they have a responsibility to design and test products to exceed all current performance and safety standards, ensuring they will operate first time, every time.

Rigorous testing is continually being carried out on the Briton range of exit hardware providing peace of mind.



Ingersoll Rand
Security Technologies

Which Exit Device?

Select the correct exit device for your application

Briton

Is it a Public Area?
Use products to EN1125

Single Doors
- < Level of Security > +

Briton 378
Reversible Rim Panic Latch



Briton 376
Vertical Panic Bolt



Briton 379.N
Mortice Panic Nightlatch



Double Rebated Doors

Briton 377
Double Rebated
Door Panic Set



or a Non Public Area?
Use products to EN179

Single Doors

Briton 1438
Reversible Push Pad
Rim Latch



Briton 372
Push Pad
Vertical Bolt



5 YEAR GUARANTEE

4 HOURS FIRE RATING
STEEL DOORS

2 HOURS FIRE RATING
TIMBER DOORS

1 HOUR FIRE RATING
TIMBER DOORS

As a life safety product it is essential that the correct exit device is used in the correct application. We have developed this selector to help you.

Finishes
All products are available in powder coated silver finish as standard. Metallic and coloured finishes are also available.
For a full finish chart see Page XX.

certifire

Need Access from Outside?

Briton 1413E/KE
Knob Variant



Briton 1413E/LE
Lever Variant



CEN Standards explained

Under the European (CEN) standards, exit devices have been differentiated so that the right type of product can be specified for the right application.

Suitable for PUBLIC BUILDINGS

EN 1125

Applies to PANIC APPLICATIONS where the exit door is used by the public and provides "safe and effecive escape through the doorway with minimum effor and without prior knowledge of operation."

For Example: In theatres, schools, shops, hospitals, cinemas

Product Type: Touch bars and cross bars which cover the full width of the door

NOT Suitable for PUBLIC BUILDINGS

EN 179

Applies to EMERGENCY APPLICATIONS where the exit door is used by people who "are familiar with the emergency exit and its hardware and therefore a panic situation is unlikely to occur."

For Example: In a low occupancy place of work, never accessed by the public or people unfamilar with the escape drill

Product Type: Push pad operated devices.

When in doubt ALWAYS choose a product certified to EN1125

From January 2010 all panic exit devices must be manufactured to the latest updated European standards, EN 1125 and EN 179

BRITON 376 PUSH BAR - VERTICAL PANIC BOLT

- Two point locking for extra security
- Anti-thrust device, prevents unauthorised retraction of the latch bolt
- Suitable for use on single and double door applications
- Self-handed will suit both left and right handed doors
- Suitable for doors up to 2500mm high x 1300mm wide
- Optional models available include Pullman latches, alarmed and manually dogged (hold open) functions
- Adjustable top and bottom shoots
- Supplied with an easy clean socket
- Metal door variant available with metal door strikes and machine screws, order 376M

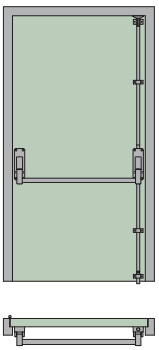



376

5 YEAR GUARANTEE | 2 HOURS FIRE RATING TIMBER DOORS | 4 HOURS FIRE RATING STEEL DOORS | Suitable for PUBLIC BUILDINGS

CE

Code	Description	Finish	Barcode
376	Push Bar - Vertical Panic Bolt	SE	5 027968 501023
376.A	Push Bar - Vertical Panic Bolt C/W Alarm Switch	SE	5 027968 503003
376.D	Push Bar - Vertical Panic Bolt C/W Manual Dogging*	SE	5 027968 502501

TOP TIP

*Manual dogging permits free access during designated periods. NOT TO BE USED ON FIRE DOORS.

BRITON 378 PUSH BAR - RIM PANIC LATCH

- Suitable for use on single doors and the first opening leaf of double doors with rebated meeting stiles
- Supplied in left or right hand, but can be reversed on site
- Suitable for doors up to 1300mm wide
- Double door strike available for double rebated door applications
- Available with manual dogging (hold open)
- Can be used with rim cylinder fitted to the outside of the door
- Metal door variant available with a metal door strike and machine screws order 378M

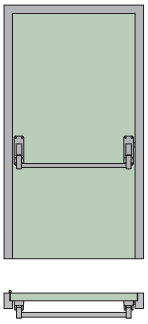

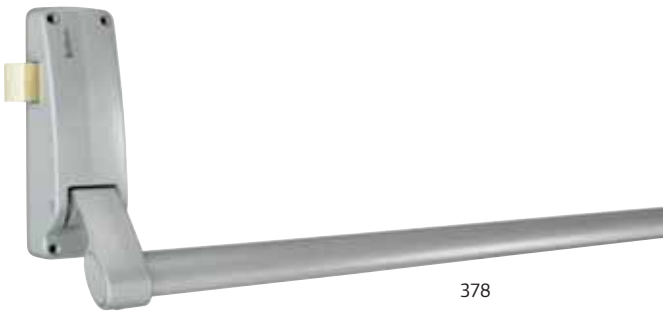

378

5 YEAR GUARANTEE | 2 HOURS FIRE RATING TIMBER DOORS | 4 HOURS FIRE RATING STEEL DOORS | Suitable for PUBLIC BUILDINGS

CE

Code	Description	Finish	Barcode
378.R	Push Bar - Rim Panic Latch R/H, Site Reversible to L/H	SE	5 027968 503751
378.D.R	Push Bar - Rim Panic Latch R/H c/w Manual Dogging*, Site Reversible to L/H	SE	5 027968 504253
378.D.L	Push Bar - Rim Panic Latch L/H c/w Manual Dogging*, Site Reversible to R/H	SE	5 027968 504000

BRITON 377 PUSH BAR-DOUBLE REBATED DOOR PANIC SET (COMPRISES OF 376, 378 AND 378DDS)

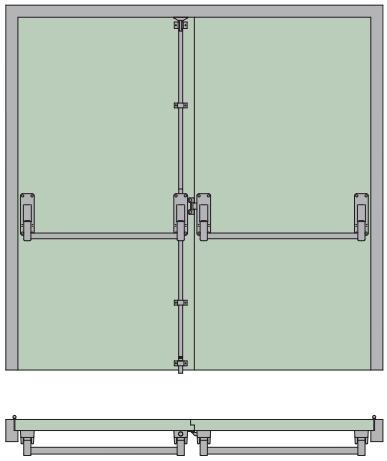

- Designed for use on double rebated door sets
- Two point locking for extra security
- Anti-thrust device, prevents unauthorised retraction of the latch bolt
- Suitable for doors up to 2500mm high x 1300mm wide door leaf
- Optional models available include Pullman latches, alarmed and manually dogged (hold open) functions
- Adjustable top and bottom shoots
- Supplied with an easy clean socket
- Metal door variant available with metal door strikes and machine screws, order 376M, 378M and 378MDS.
- Comprises 376.R, 378.R and 378DDS



377

5 YEAR GUARANTEE

2 HOURS FIRE RATING

TIMBER DOORS

4 HOURS FIRE RATING

STEEL DOORS

Suitable for PUBLIC BUILDINGS

CE

Code	Description	Finish	Barcode
377.L	Push Bar - Double Rebated Door Panic Set L/H, comprises of 376, 378.L & 378DDS	SE	5 027968 504253
377.R	Push Bar - Double Rebated Door Panic Set R/H, comprises of 376, 378.L & 378DDS	SE	5 027968 513750

BRITON 378DDS DOUBLE DOOR STRIKE

- Can be used in conjunction with a 376 and 378 to provide a solution for double rebated doors
- Suitable for timber doors only



378DDS

Code	Description	Finish	Barcode
378DDS	Double Door Strike	SE	5 027968 501283

BRITON 379.N
MORTICE PANIC NIGHTLATCH

- Suitable for use on single doors and the first opening leaf of double door applications
- Supplied Right hand, but can be reversed on site
- Suitable for doors up to 1300mm wide
- Supplied with dual profile cylinder mortice nightlatch, accepts both euro and oval profile cylinders (cylinders not supplied)
- Anti-thrust device, prevents unauthorised retraction of the latch bolt
- Optional models include alarmed and manually dogged (hold open) functions

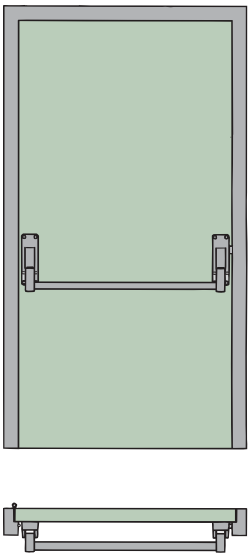

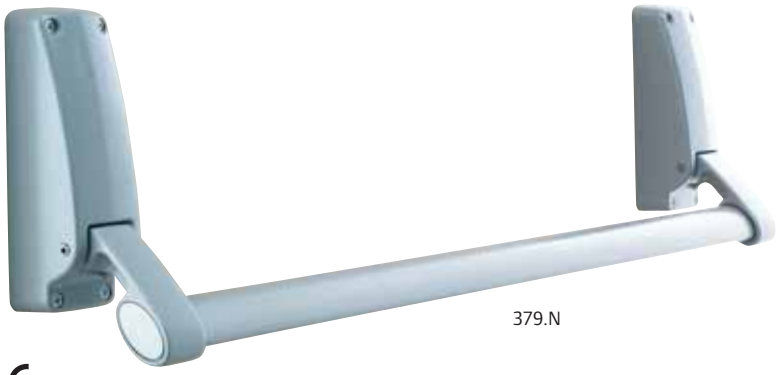

379.N

CE

5 YEAR GUARANTEE | 1 HOUR FIRE RATING | 4 HOURS FIRE RATING | Suitable for PUBLIC BUILDINGS

TIMBER DOORS | STEEL DOORS

Code	Description	Finish	Barcode
379.N	Push Bar Morticed Panic Nightlatch	SE	5 027968 512005

BRITON 1438 REVERSIBLE
PUSH PAD RIM LATCH

- Pad operated rim latch
- Suitable for use on single doors and the first opening leaf of double rebated door applications
- Supplied in left or right hand, but can be reversed on site
- Suitable for doors up to 1300mm wide
- Security – Grade 3: 2,000 Newtons
- Double door strike available for double rebated door applications
- Can be used with a rim cylinder fitted to the outside of the door or with a 1413E Outside Access Device
- Metal door variant available with a metal door strike and metal thread screws order 1438M
- A mortice nightlatch version is also available - 389.N



1438

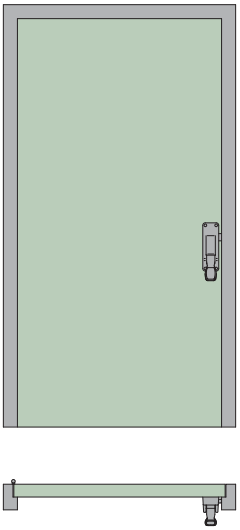

CE

5 YEAR GUARANTEE | 2 HOURS FIRE RATING | 4 HOURS FIRE RATING | NOT Suitable for PUBLIC BUILDINGS

TIMBER DOORS | STEEL DOORS

Code	Description	Finish	Barcode
1438.R	Push Pad - Rim Latch, Site reversible to LH	SE	5 027968 505755

BRITON 372 PUSH PAD - VERTICAL BOLT

- Pad operated vertical bolt
- Suitable for use on single and double door applications
- Self-handed to suit left and right handed doors
- Suitable for doors up to 2500mm high x 1300mm wide
- Security - Grade 4: 3,000 Newtons
- Anti-thrust device, prevents unauthorised retraction of the latch bolt
- Adjustable top and bottom shoots
- Supplied with an easy clean socket
- Metal door variant available with metal door strikes and machine screws, order 372M



372

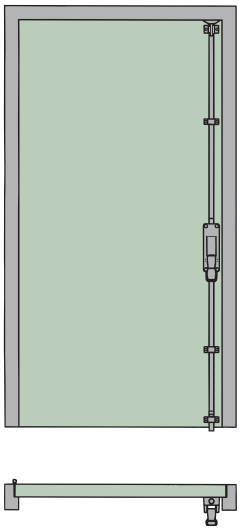

5 YEAR GUARANTEE

2 HOURS FIRE RATING
TIMBER DOORS

4 HOURS FIRE RATING
STEEL DOORS

NOT Suitable for PUBLIC BUILDINGS

CE

Code	Description	Finish	Barcode
372	Push Pad - Vertical Bar	SE	5 027968 501009

BRITON 1413E
OUTSIDE ACCESS DEVICE

- Designed to suite with all devices in the Briton 376 series
- Supplied with euro-profile cylinder as standard.
- Cylinders can be keyed-alike or master-keyed
- Clearly illustrated instructions and template enabling accurate installation
- Suitable for doors between 40mm and 70mm thick
- Fixings supplied are suitable for timber and metal doorsets
- Powdered coated for additional durability
- Available without cylinder if required
- Available either knob or lever variant


1413E/LE


1413E/KE

5 YEAR GUARANTEE

Code	Description	Finish	Barcode
1413E/LE	Outside Access Device Lever Operated c/w Euro-profile cylinder	SE	5 027968 527504
1413E/KE	Outside Access Device Knob Operated c/w Euro-profile cylinder	SE	5 027968 527009

Please note: Not recommended for high use areas

TOP TIP

We do not recommend the Briton 1413E be used in high use areas.

Security - Residential

The Legge range of residential security products includes rim nightlatches, mortice lever locks, rim locks and secondary security products.

It is worth remembering that 8 out of 10 burglaries are committed by opportunist thieves – in fact in 20% of cases the burglar enters through a door or window that has been left open. Burglars are always on the lookout for an easy target so a few simple and cost effective precautions will put them off.

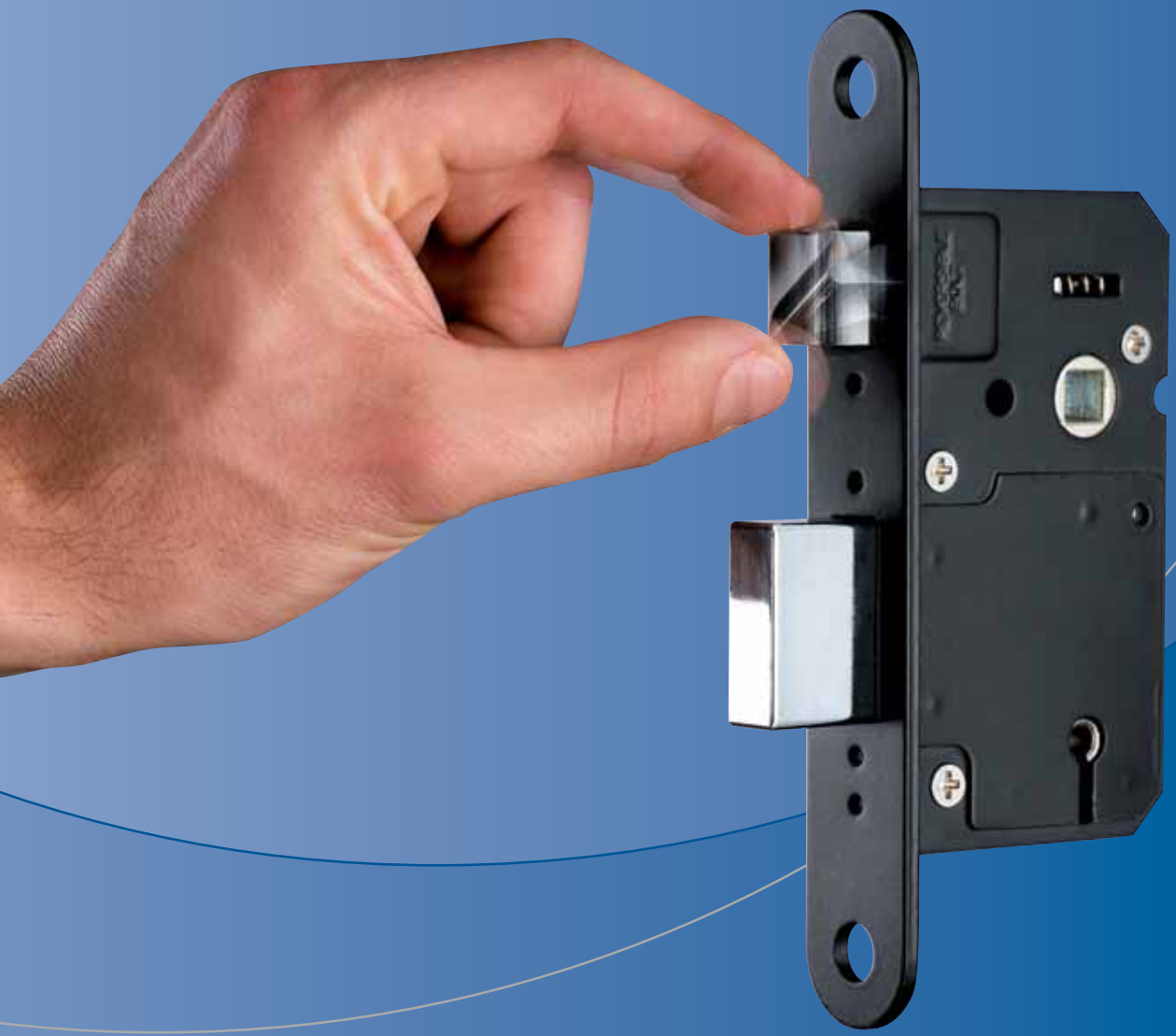

Ingersoll Rand
Security Technologies

Which Lock?

Briton

Selecting the correct lock for your application

I need a lock for a ....

	High Security		Medium Security				Low Security				Keyless
	BS 5 lever sashlock	BS 5 lever deadlock	5 lever sashlock	5 lever deadlock	3 lever sashlock	3 lever deadlock	2 lever sashlock	Nightlatch	Rim lock	Bathroom lock	Push Button Digital Lock
Front Door		●		●				● *			
Back Door	●		●								
Bathroom Door										●	
Internal Door					●	●	●		●		●
Internal Office Door	●	●	●	●	●	●	●				
Traditional/period door	●	●		●					●		
Shed door									●		●

in conjunction with the BS 5 lever deadlock

Product codes

	High Security		Medium Security				Low Security				Keyless
	BS 5 lever sashlock	BS 5 lever deadlock	5 lever sashlock	5 lever deadlock	3 lever sashlock	3 lever deadlock	2 lever sashlock	Nightlatch	Rim lock	Bathroom lock	Push Button Digital Lock
Find the product you require:	P5642 (64mm)	P5641 (64mm)	P2645 (64mm)	P1645 (64mm)	P2643 (64mm)	P1643 (64mm)	P159	P785	P2136 rim lock	P7643	P2250
	P5762 (76mm)	P5761 (76mm)	P2765 (76mm)	P1765 (76mm)	P2763 (76mm)	P1763 (76mm)	P2378	P789	P2143 rim latch	P7763	P2255
								P707	P2144 rim deadlock		
								P727			
								P766			

Home security - a simple guide to what products to use where

Door security

Most front doors are fitted with a **nightlatch**, which latches automatically when the door is closed, but can be opened from inside without a key. These provide a measure of security but can be forced by thieves so shouldn't be relied upon on their own.

All external doors should be fitted with a kitemarked lock certified to BS 3621. For timber doors this would be a **BS 5 lever mortice deadlock or a sashlock**. A door fitted with one of these can only be opened with a key, so a thief can't smash a glass panel or climb in through a window to open it from the inside.

An extra measure of security can be provided by fitting **rack** or **tube bolts**, top and bottom, to all exterior doors.

For outward opening doors **hinge bolts** should also be fitted to prevent the door hinges themselves from being forced.

Patio doors



Sliding patio doors can be particularly vulnerable to attack, as they can be lifted out of the frame. Fit a patio door lock top and bottom where the sliding doors meet, which locks them together and holds them in place.

Window security



Fitting locks to your windows means a burglar has to break the glass to gain access, which risks attracting attention. Casement windows can be secured with a simple **snap lock** fitted to the frame. Sash windows can be secured using a **sash window bolt**, which locks the two sashes together.

Perimeter security



It's not just the doors and windows that need to be secure – garden theft is on the rise and sheds and garages can also be vulnerable. A strong, lockable gate fitted across a side passage will prevent a thief getting to the rear of a property. These can be secured using a **rim lock** or **padlock and hasp**.

Fit shed and garage doors with a strong padlock and hasp. Where there is a connecting door to the house this should be treated as an external door and fitted with a BS kitemarked lock.

Residential Entrance Security

Legge

Timber Door Construction
The door itself should be at least 44mm thick and constructed of solid timber with any panels a minimum of 14mm thick. The door frame must be solid and securely fixed to the walls at least every 600mm around the whole frame.
Any glass panels should be laminated security glass or have a metal grid or polycarbonate shield on the inside.

Door Hardware
The hardware fitted to the door can have a significant effect on security and as a consequence this can reduce the cost of some insurance policies. Please ensure you check the particulars of your own policy.

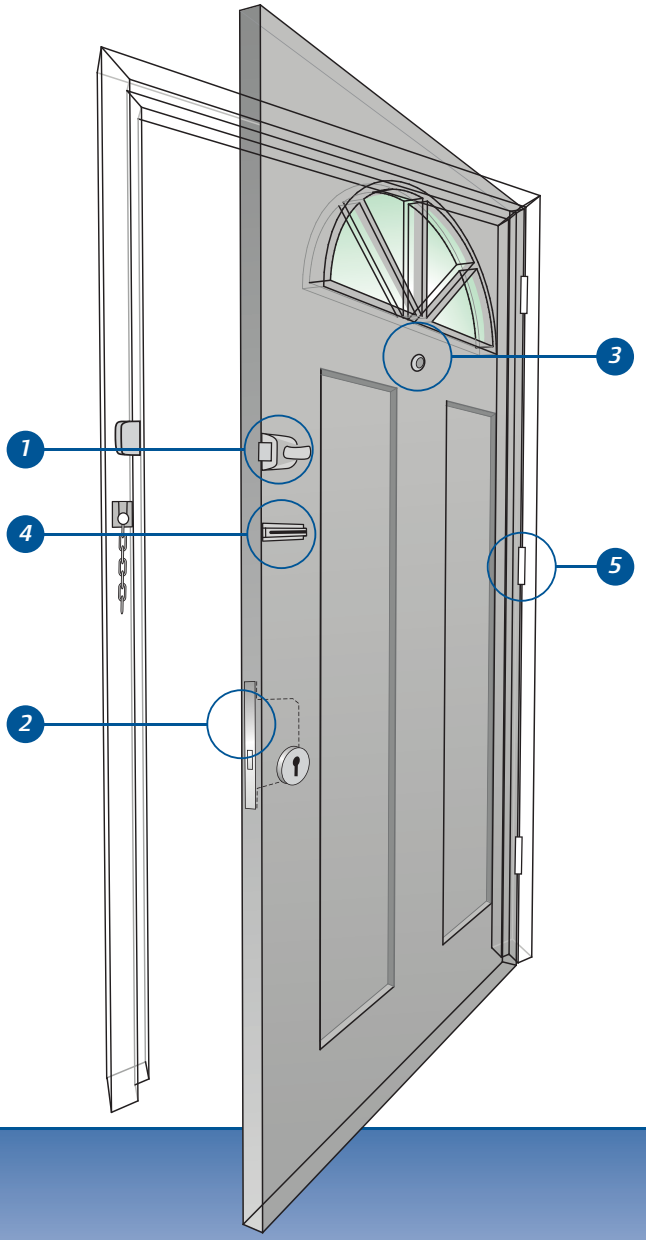

1. A good quality Automatic Deadlocking Nightlatch should be fitted approximately 1/3 of the way down the door. The automatic deadlatch function prevents forced entry using a credit card from outside.

2. A good quality 5 lever mortice deadlock should be fitted approximately 1/3 of the way up the door. This should be a kitemarked lock to BS3621:2007.

3. A door viewer allows the occupant to see who is at the door before opening the door.

4. A door chain allows the occupant to check who is calling without having to fully open the door.

TOP TIP

For all mortice locks it is important for fire escape reasons that everyone in the house knows where the keys are kept.

Hinges & Hinge Bolts

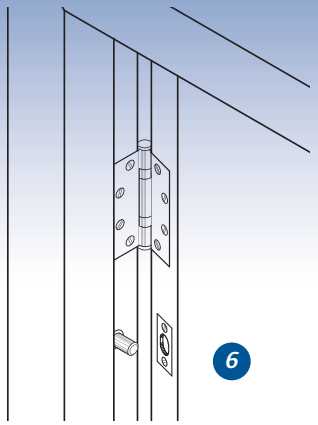

5. **Hinges**
The door should be fitted with at least three, 100mm hinges. The hinges should be selected to suit the weight of the door and are generally available to suit different door thicknesses. The hinges should be in accordance with BS EN 1935.

6. **Hinge Bolts**
It is recommended to fit two or three hinge bolts midway between the hinges. These are essential if the door opens outwards as it prevents the door being opened by cutting or grinding off the hinge knuckles.

Lever Locks & Latches

Legge

Mortice locks can either be operated by a cylinder or by integral levers. In the case of lever locks the higher the number of levers, the more security the lock provides. Most insurance companies require that external timber doors are secured by a British Standard 5 Lever Mortice Lock. Look for the kitemark when specifying and purchasing products. Internal doors and those on outbuildings can be secured by a 2 or 3 lever lock, but these will not offer the same level of security as a BS 5 lever kitemarked lock.

What lock type?

Sashlock

Has 2 bolts, a key operated deadbolt and a separate handle operated latchbolt. Ideal for use on doors which are in frequent use and which can be locked.



Deadlock

Has a key operated deadbolt and is mainly used for securing main entrance doors as additional security when using a rim nightlatch.



Bathroom Lock

A mortice lock for use on doors where privacy is required. Should be used with bathroom door furniture.



Additional benefits of Legge lever locks

Co-ordinated modular platform lockcases

The Legge platform lock range of BS 5 lever, 5 lever and 3 lever lockcases are available in deadlock and sashlock versions in both 64mm and 76mm case sizes.

The modular nature of these locks provides significant benefits in terms of common door preparations and interchangeability. As the locks all have the same dimensions security can easily be upgraded from say a 3 lever lock to a 5 lever lock without the need for further carpentry.





Twist reversible latch bolt

To assist you in the selection and installation process all our platform range of mortice lever locks incorporate this feature, which offers a fast and easy way of reversing the hand of the latch in seconds, without the need to open the lockcase. This means that you do not need to know the hand of the door when selecting your lock.



Replacing an existing lock

If you are replacing an existing mortice cylinder lockcase you can find out the size you require by simply measuring from the edge of the door to the centre of the keyhole – this gives you the backset measurement.

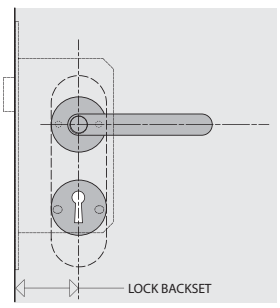

Backset Measurement	35mm (1 3/8″)	44mm (1 3/4″)	57mm (2 1/4″)
Lockcase Size Required	51mm 2″	64mm 2 1/2″	76mm 3″

Suitable for use on fire doors

All Legge lever locks have been successfully included in fire door tests to EN 1634 for use on 30 and 60 minute timber fire doors and 4 hour steel fire doors.



TIMBER DOORS TIMBER DOORS STEEL DOORS

LEGGE PLATFORM LEVER LOCKS

Platform modular lock dimensions

All Legge BS 5 lever, 5 lever and 3 lever locks shown in this catalogue share the same modular dimensions which are indicated below.

Sashlock

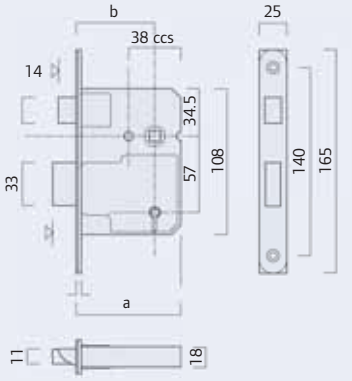

Deadlock

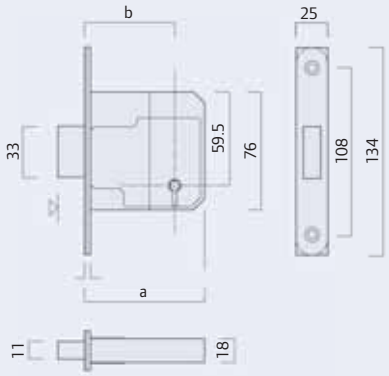

Dimensions (A) Case Size and (B) Backset are detailed for each lock in the product tables

5 LEVER BS COMPLIANT

- Dimensional co-ordination of platform range
- BS 3621:2007 compliant
- 20mm deadbolt throw
- 5 close gated levers with anti pick device
- 1000 differs
- Anti-drill plates
- Hardened steel deadbolt
- Twist reversible latchbolt
- 3 plated steel keys



5761

5762

BS 3621:2007
Licence KM662

10 YEAR GUARANTEE

½ HOUR FIRE RATING
TIMBER DOORS

1 HOUR FIRE RATING
TIMBER DOORS

4 HOURS FIRE RATING
STEEL DOORS

CE

Code	Description	Case Size (A)	Backset (B)	Finish	Barcode
P5641.SS	5 Lever Deadlock	64mm	44mm	SS	5 050640 024947
P5641.PB	5 Lever Deadlock	64mm	44mm	PB	5 050640 024930
P5761.SS	5 Lever Deadlock	76mm	57mm	SS	5 050640 024961
P5761.PB	5 Lever Deadlock	76mm	57mm	PB	5 050640 024954
P5642.SS	5 Lever Sashlock	64mm	44mm	SS	5 050640 024909
P5642.PB	5 Lever Sashlock	64mm	44mm	PB	5 050640 024893
P5762.SS	5 Lever Sashlock	76mm	57mm	SS	5 050640 024923
P5762.PB	5 Lever Sashlock	76mm	57mm	PB	5 050640 024916

Part numbers indicated above are for pre-packed variants. Boxed variants are also available - simply remove the P prefix when ordering.

5 LEVER

- Dimensional co-ordination of platform range
- 5 close gated levers with anti pick device
- 500 differs
- Brass deadbolt with revolving hardened steel inserts
- Twist reversible latchbolt
- 2 plated steel keys

CE



5 YEAR GUARANTEE | 1 HOUR FIRE RATING TIMBER DOORS | ½ HOUR FIRE RATING TIMBER DOORS | 4 HOURS FIRE RATING STEEL DOORS

Code	Description	Case Size (A)	Backset (B)	Finish	Barcode
P1645.SS	5 Lever Deadlock	64mm	44mm	SS	5 010564 011058
P1645.PB	5 Lever Deadlock	64mm	44mm	PB	5 010564 011041
P1765.SS	5 Lever Deadlock	76mm	57mm	SS	5 010564 011072
P1765.PB	5 Lever Deadlock	76mm	57mm	PB	5 010564 011065
P2645.SS	5 Lever Sashlock	64mm	44mm	SS	5 010564 011010
P2645.PB	5 Lever Sashlock	64mm	44mm	PB	5 010564 011003
P2765.SS	5 Lever Sashlock	76mm	57mm	SS	5 010564 011034
P2765.PB	5 Lever Sashlock	76mm	57mm	PB	5 010564 011027

3 LEVER

- Dimensional co-ordination of platform range
- 3 close gated levers
- 100 differs
- Brass deadbolt
- Twist reversible latchbolt
- 2 plated steel keys

CE

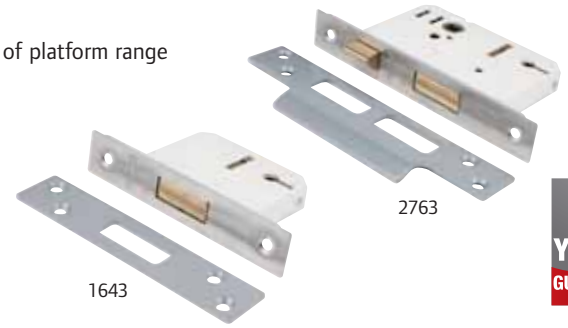

5 YEAR GUARANTEE | ½ HOUR FIRE RATING TIMBER DOORS | 1 HOUR FIRE RATING TIMBER DOORS | 4 HOURS FIRE RATING STEEL DOORS

Code	Description	Case Size (A)	Backset (B)	Finish	Barcode
P1643.SS	3 Lever Deadlock	64mm	44mm	SS	5 010564 009222
P1643.PB	3 Lever Deadlock	64mm	44mm	PB	5 010564 009208
P1763.SS	3 Lever Deadlock	76mm	57mm	SS	5 050640 022189
P1763.PB	3 Lever Deadlock	76mm	57mm	PB	5 010564 009215
P2643.SS	3 Lever Sashlock	64mm	44mm	SS	5 010564 008416
P2643.PB	3 Lever Sashlock	64mm	44mm	PB	5 010564 008409
P2763.SS	3 Lever Sashlock	76mm	57mm	SS	5 010564 008430
P2763.PB	3 Lever Sashlock	76mm	57mm	PB	5 010564 008423

Part numbers indicated above are for pre-packed variants. Boxed variants are also available - simply remove the P prefix when ordering.

LEGGE PLATFORM BATHROOM LOCKS

LEGGE 7643 & 7763

Legge 7643 and 7763 bathroom locks form part of the Legge platform range and are therefore dimensionally compatible with the Platform range of 5 lever and 3 lever sashlocks.

- Dimensional co-ordination of platform range
- Twist Reversible latchbolt
- Brass deadbolt
- Suitable for bolt through furniture fixings at 38mm centres
- 5mm deadbolt follower & 8mm lever follower

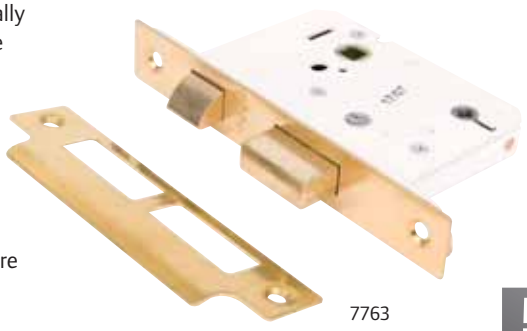

7763

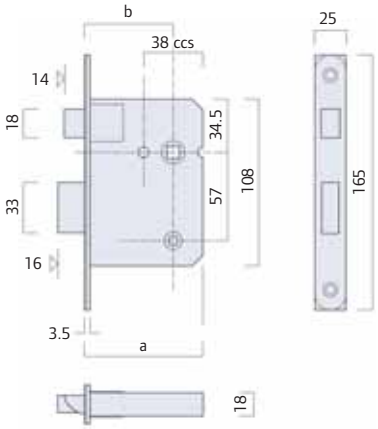

5 YEAR GUARANTEE

½ HOUR FIRE RATING TIMBER DOORS

1 HOUR FIRE RATING TIMBER DOORS

4 HOURS FIRE RATING STEEL DOORS

Code	Description	Case Size (A)	Backset (B)	Finish	Barcode
P7643.SS	Bathroom Lock	64mm	44mm	SS	5 010564 008249
P7643.PB	Bathroom Lock	64mm	44mm	PB	5 010564 008232
P7763.SS	Bathroom Lock	76mm	57mm	SS	5 010564 008263
P7763.PB	Bathroom Lock	76mm	57mm	PB	5 010564 008256

Bathrooom locks are available boxed.

LEGGE NON-PLATFORM LEVER LOCKS

2 LEVER

- 2 brass levers
- High strength Zytel 8mm follower
- 24 differs
- Brass deadbolt
- Reversible latchbolt
- 2 die cast keys

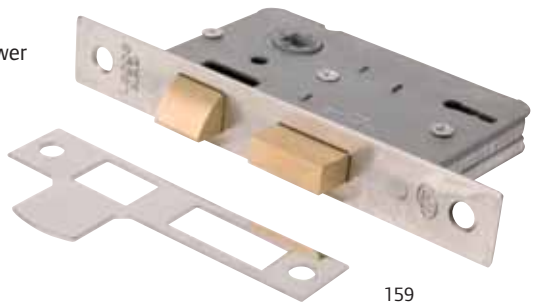

159

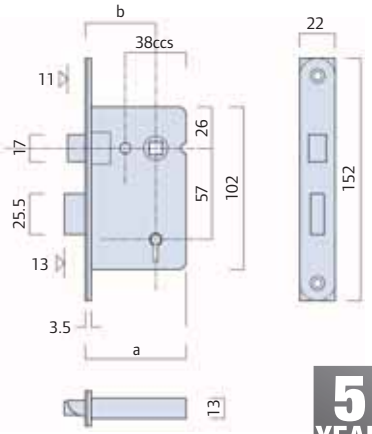

5 YEAR GUARANTEE

Code	Description	Case Size (A)	Backset (B)	Finish	Barcode
P159.PB	2 Lever Sashlock	64mm	44mm	PB	5 010564 007211
P159.NP	2 Lever Sashlock	64mm	44mm	NP	5 010564 007204
P2378.PB	2 Lever Sashlock	76mm	57mm	PB	5 010564 007617
P2378.NP	2 Lever Sashlock	76mm	57mm	NP	5 010564 007600

LEGGE 3751

- Reversible latchbolt
- Brass deadbolt
- Suitable for bolt through furniture fixings at 38mm centres
- 8mm high strength Zytel follower

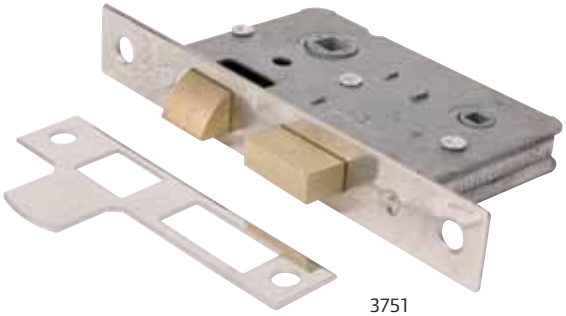

3751

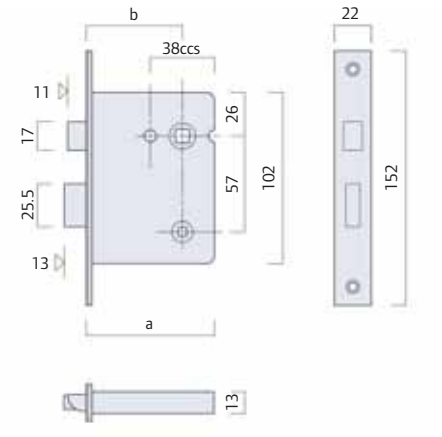

5 YEAR GUARANTEE

Code	Description	Case Size (A)	Backset (B)	Finish	Barcode
P3751/2.5.PB	Bathroom Lock	64mm	44mm	PB	5 050640 022424 >
P3751/2.5.NP	Bathroom Lock	64mm	44mm	NP	5 010564 208205 >
P3751/3.0.PB	Bathroom Lock	76mm	57mm	PB	5 010564 008225 >

LEGGE 2512

- Suitable for bolt through fixings at 38mm centres
- Round or square ended forend
- Thumbturn operation
- 5mm centres or 8mm follower



2512/5

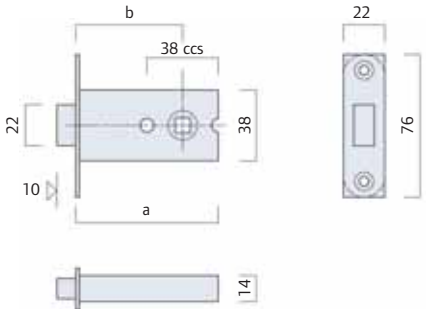

3 YEAR GUARANTEE

Code	Description	Case Size (A)	Backset (B)	Follower Size	Finish	Barcode
2512/5SS	Bathroom Deadlatch	76mm	57mm	5mm	SS	5 050640 021939 >
2512/5PB	Bathroom Deadlatch	76mm	57mm	5mm	PB	5 050640 021922 >
2512/8SS	Bathroom Deadlatch	76mm	57mm	8mm	SS	5 050640 021953 >
2512/8PB	Bathroom Deadlatch	76mm	57mm	8mm	PB	5 050640 021946 >

Only available boxed.

LEGGE LATCHES

MORTICE LATCHES

- Suitable for bolt through fixings at 38mm centres
- 8mm Zytel follower
- Locking function when used with ref:14 thumbturn (3709 only)
- CE 3708 only

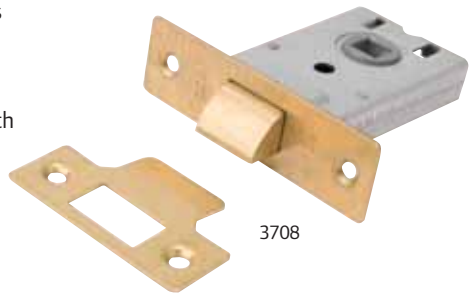

3708

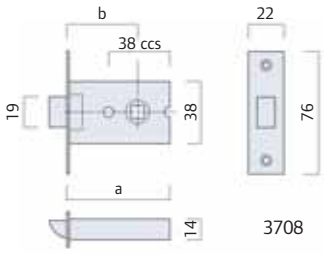

3708

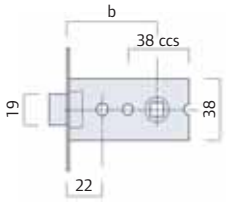

3709LK

3 YEAR GUARANTEE

Code	Description	Case Size (A)	Backset (B)	Finish	Barcode
3708PB	Architectural latch	64mm	44mm	PB	5 050640 022325
3708NP	Architectural latch	64mm	44mm	NP	5 010564 204801
3709PB	Architectural latch	76mm	60mm	PB	5 010564 204382
3709NP	Architectural latch	76mm	60mm	NP	5 010564 204818

TUBULAR LATCH

- 8mm high strength zytel follower
- Locking function when used with Ref:14 thumbturn (3722LK & 3724LK versions only)
- CE 3721 & 3722 only

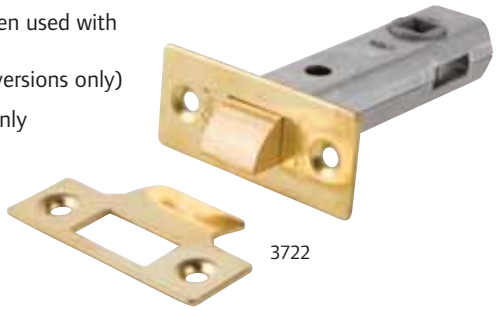

3722

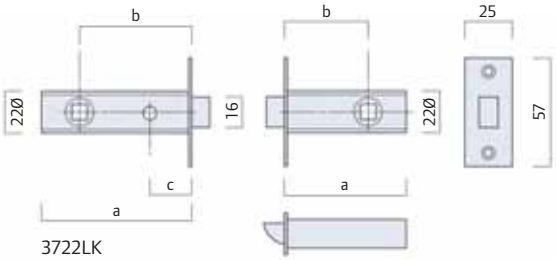

3722LK
3724LK

3721
3722

LIFETIME GUARANTEE

Code	Description	Case Size (A)	Backset (B)	Locking (C)	Finish	Barcode
3721PB	Tubular Latch	64mm	44mm	-	PB	5 010564 205013
3721NP	Tubular Latch	64mm	44mm	-	NP	5 050640 022356
3722PB	Tubular Latch	79mm	60mm	-	PB	5 010564 205037
3722NP	Tubular Latch	79mm	60mm	-	NP	5 010564 205006
3722LKPB	Tubular Latch	79mm	60mm	22	PB	5 010564 005217
3722LKNP	Tubular Latch	79mm	60mm	22	NP	5 010564 204962
3724LKPB	Tubular Latch	95mm	76mm	28	PB	5 010564 205419
3724LKNP	Tubular Latch	95mm	76mm	28	NP	5 010564 205402

ROLLER LATCH

Brass adjustable roller latch providing a positive push pull operation.

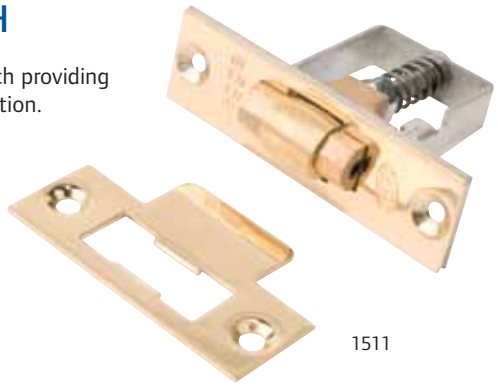

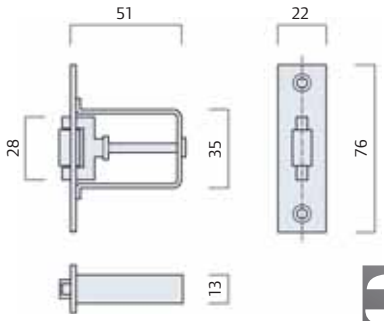

3 YEAR GUARANTEE

Code	Description	Case Size	Finish	Barcode
1511SS	Roller Latch	51mm	SS	5 010564 250037
1511PB	Roller Latch	51mm	PB	5 010564 250013

REBATE SETS

A Series of rebate sets is available to enable the installation of Legge mortice locks and latches into rebated doors. Most rebate sets are available to suit both 13mm and 25mm rebate depths.

This selector is designed to show which rebate sets can be used with Legge locks.

	159/2378	1511	1643/17635	1645/1765	7643/7763	2512	2643/2763	2645/2765	3708/3709LK	3721/3722	3722LK/3724LK	3751	5641/5761	5642/5762
Rebate	59	2566	41	41	42	2567	42	42	08	21	21	59	41	42
13mm	●	●	●	●	●	●	●	●	●	●	●	●	●	●
25mm			●	●	●		●	●					●	●

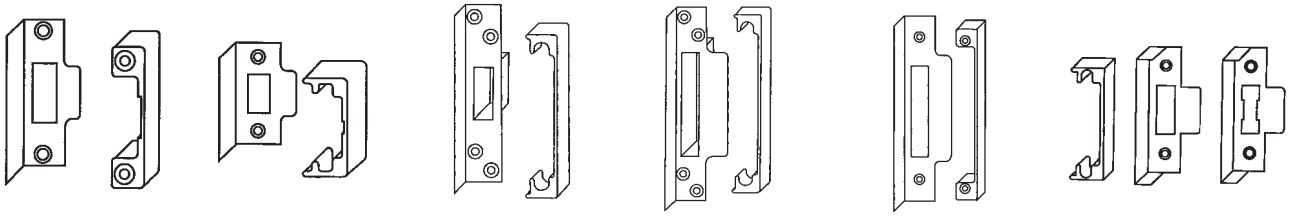

08 21 41 42 59 2567 2566

Code	Description	Finish
B08/0.5	Rebate Conversion Set - 12.5mm	PB
B21/0.5	Rebate Conversion Set - 12.5mm	PB
B41/0.5	Rebate Conversion Set - 12.5mm	PB
B41/1.0	Rebate Conversion Set - 25mm	PB
B42/0.5	Rebate Conversion Set - 12.5mm	PB
B42/1.0	Rebate Conversion Set - 25mm	PB
B59/0.5	Rebate Conversion Set - 12.5mm	PB
E2566/0.5	Rebate Conversion Set - 12.5mm	PB

NP and SCP finishes are also available. Please contact our Technical Department on 0800 834102 for more details.

SECONDARY SECURITY

RACK BOLT

- Morticed bolt that is suitable as additional security
- Fitted bolt cannot be seen from the outside
- Operated by key from inside only
- Recommended one bolt is used top and bottom of a door

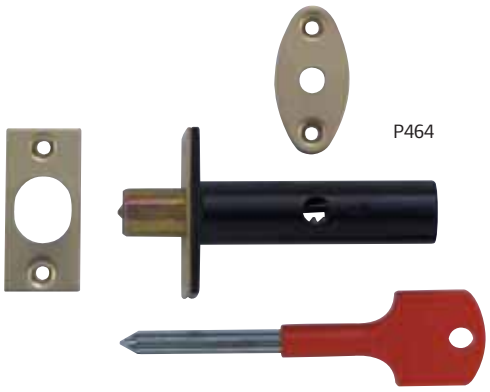

P464

Code	Description	Finish	Barcode
P464SS	2 Rack Bolts 1 Key	SS	5 050640 023780
P465	2 Rack Bolt Keys only	Misc	5 010564 015421

PATIO DOOR LOCK

- Suitable for use on sliding patio doors



P68615

Code	Description	Finish	Barcode
P68615	Patio door lock	WT	5 010564 015452

MULTI-PURPOSE BOLT

- Surface mounted lockable door bolt for both metal and wooden doors
- Operated by sliding bolt and locked with a key
- Suitable for use on sliding patio doors, timber doors and French windows



P68616

Code	Description	Finish	Barcode
P68616	Multi-purpose bolt	WT	5 010564 015537

SNAP WINDOW LOCK

- Popular simple fit and easy to use surface mounted lock
- Ideal for security casement windows
- Particularly suitable for narrower frames



P68617

Code	Description	Finish	Barcode
P68617WT	Snap window lock	WT	5 010564 015544

SASH WINDOW BOLT

- Bolt is driven through the inner sliding sash window frame with an inner bolt screwed from the barrel into the outer frame to secure the window
- Secured by a key
- Sold as 6 pack



P68618

Code	Description	Finish	Barcode
P68618SC	Sash window bolts	SC	5 010564 015551

HINGE BOLTS

- Mortice fitted hinge bolts ideal for providing additional security on outward opening hinged wooden doors
- Offers added protection against forcing the door hinges



P68605

Code	Description	Finish	Barcode
P68605ZP	Hinge Bolt	ZP	5 010564 015483

Nightlatches & Rim Locks

Legge

Nightlatches

Most front doors are fitted with a rim nightlatch, which locks automatically when the door is closed, but can be opened from the inside without a key. Most can be deadlocked by a snib from inside or by turning the key from the outside. These provide a measure of security but can be forced by thieves so shouldn't be relied upon on their own. On external doors they must always be used in combination with a BS kitemarked lock.

Our Legge range of nightlatches provides a series of surface mounted nightlatches with both deadlocking and non deadlocking functions. These are suitable for use on inward and outward opening doors (separate strike plates will be required for outward opening doors).

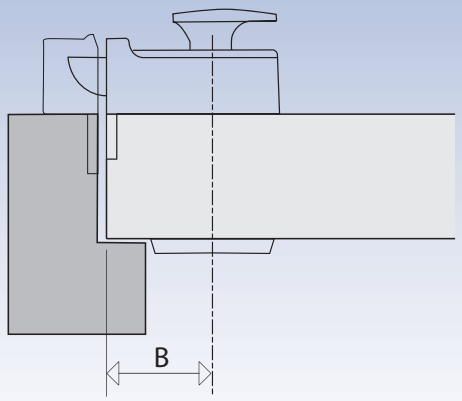



When selecting a replacement nightlatch, it is important to check that the backset (B) (ie. the measurement from the centre of the keyhole to the edge of the door) is the same as your existing lock. If you are fitting a lock to a new door, choose the longest backset that allows a comfortable fit.

Rim Locks

A surface mounted rim lock should only be used where a high level of security is not required. Rim locks are ideal for internal doors, particularly in period properties or gates and outbuildings.
Our Legge range also includes a selection of knobs with 8mm spindles to operate our rim locks.



NIGHTLATCHES

COMMON FEATURES OF THE RANGE

All Legge nightlatches incorporate the following features:

- Brass Latch Bolt
- Supplied with 5 pin rim cylinder
- Suitable for masterkeying
- Suitable for most retrofit application

785 & 789 NIGHTLATCHES

- Knob operation to withdraw the latch
- Switchable deadlocking or non deadlocking
- Deadlock by snib when set to deadlocking function
- Latch can be held in withdrawn position by snib



785

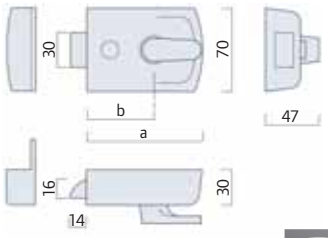

3 YEAR GUARANTEE

Code	Description	Case Size (A)	Backset (B)	Finish	Barcode
P785	Nightlatch	69mm	40mm	PB	5 050640 019936
P785	Nightlatch	69mm	40mm	PB / SV	5 050640 019943
P789	Nightlatch	99mm	60mm	PB	5 050640 019974
P789	Nightlatch	99mm	60mm	PB / SV	5 050640 019981

707 & 727 MULTIFUNCTION NIGHTLATCHES

- Clockwise or anticlockwise knob operation to withdraw latch
- Latch and knob are rendered inoperative by the deadlocking function

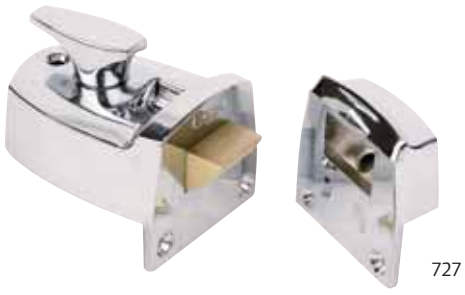

727

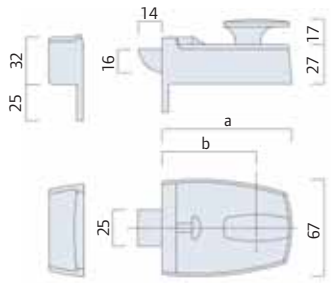

3 YEAR GUARANTEE

Code	Description	Case Size (A)	Backset (B)	Finish	Barcode
P707	Multifunction Nightlatch	89mm	60mm	PB	5 050640 019820
P707	Multifunction Nightlatch	89mm	60mm	PB / SV	5 010564 004456
P727	Multifunction Nightlatch	73mm	44mm	PB	5 050640 019882
P727	Multifunction Nightlatch	73mm	44mm	PB / SV	5 050640 019899

766 TRADITIONAL NIGHTLATCH

- Knob operation to withdraw the latch
- Non deadlocking
- Latch can be held in withdrawn position by snib



766

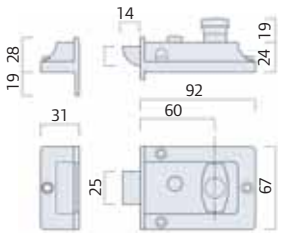

3 YEAR GUARANTEE

Code	Description	Case Size (A)	Backset (B)	Finish	Barcode
P766	Traditional nightlatch	92mm	60mm	PB	5 050640 019776 >
P766	Traditional nightlatch	92mm	60mm	PB / GD	5 050640 019783 >

RIM CYLINDER

- 5 pin cylinder as used with Legge nighlatches
- Ideal as a replacement cylinder for all nightlatches
- 2 nickel silver keys



P816

Code	Description	Finish	Barcode
P816	Replacement Rim Cylinder	PB	5 050640 019776 >
P816	Replacement Rim Cylinder	SCP	5 050640 020024 >

RIM LOCKS

COMMON FEATURES OF THE RANGE

A range of surface mounted lockcases for use with knobs featuring 8mm spindles. Ideally suited for traditional and period applications

- Brass latch and / or deadbolt

2136 RIM LOCK

- Rim lock with latch and deadbolt
- 12 differs
- 2 keys

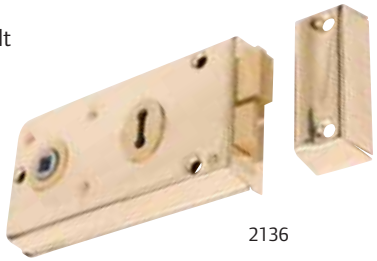

2136

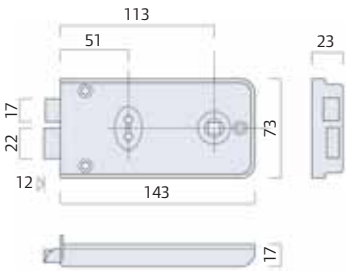

3 YEAR GUARANTEE

Code	Description	Case Size	Backset	Finish	Barcode
P2136	Rim Lock	143mm	113mm	PB	5 010564 017616 >
P2136	Rim Lock	143mm	113mm	BM	5 010564 017623 >

2143 RIM LATCH

- Rim lock with additional security
- Deadbolt operated by inside snib

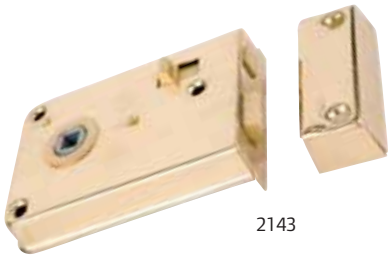

2143

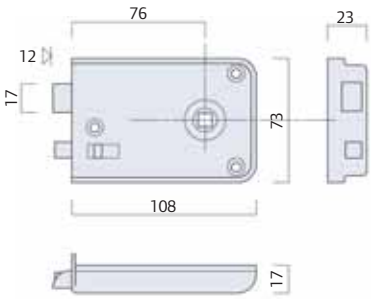

3 YEAR GUARANTEE

Code	Description	Case Size	Backset	Finish	Barcode
P2143	Rim Latch	108mm	76mm	PB	5 010564 017913
P2143	Rim Latch	108mm	76mm	BM	5 010564 017906

2144 RIM DEADLOCK

- Deadbolt operated by lever key
- 12 differs
- 2 steel keys



2144

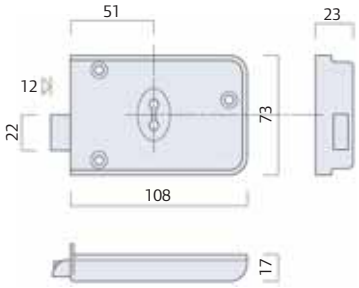

3 YEAR GUARANTEE

Code	Description	Case Size	Backset	Finish	Barcode
P2144	Rim Deadbolt	108mm	51mm	PB	5 010564 017821
P2144	Rim Deadbolt	108mm	51mm	BM	5 010564 017814

KNOB FURNITURE

- Supplied with 2 covered escutcheons
- Sold as pairs
- Knobs can be used in conjunction with a rim latch or as mortice furniture



P626



P472

3 YEAR MECHANICAL GUARANTEE

Code	Description	Finish	Barcode
P472/2.0	Knob Furniture - 51mm - Victorian - Domed	PB	5 010564 026861
P472/2.25	Knob Furniture - 57mm - Victorian - Domed	PB	5 010564 026854
P626	Knob Furniture - 60mm - Victorian - Oval	PB	5 010564 027813

TOP TIP

We recommend a latchset with a longer backset when fitting knob furniture.

Security - Commercial

In a commercial environment there are many factors affecting the type of security and hardware that is used, which differ significantly from the those faced in the home. These include controlling the access rights and times of a number of building users, whilst ensuring accessibility for all and a safe egress should an emergency arise

Our range of commercial security hardware products include Briton mortice cylinder lockcases with 72mm centres and CISA cylinders including bump and snap resistant models.

Our wider product offering embraces security steel doors, including ballistic doors; bomb blast resistant automatic doors; and electronic access control systems, including biometric recognition.

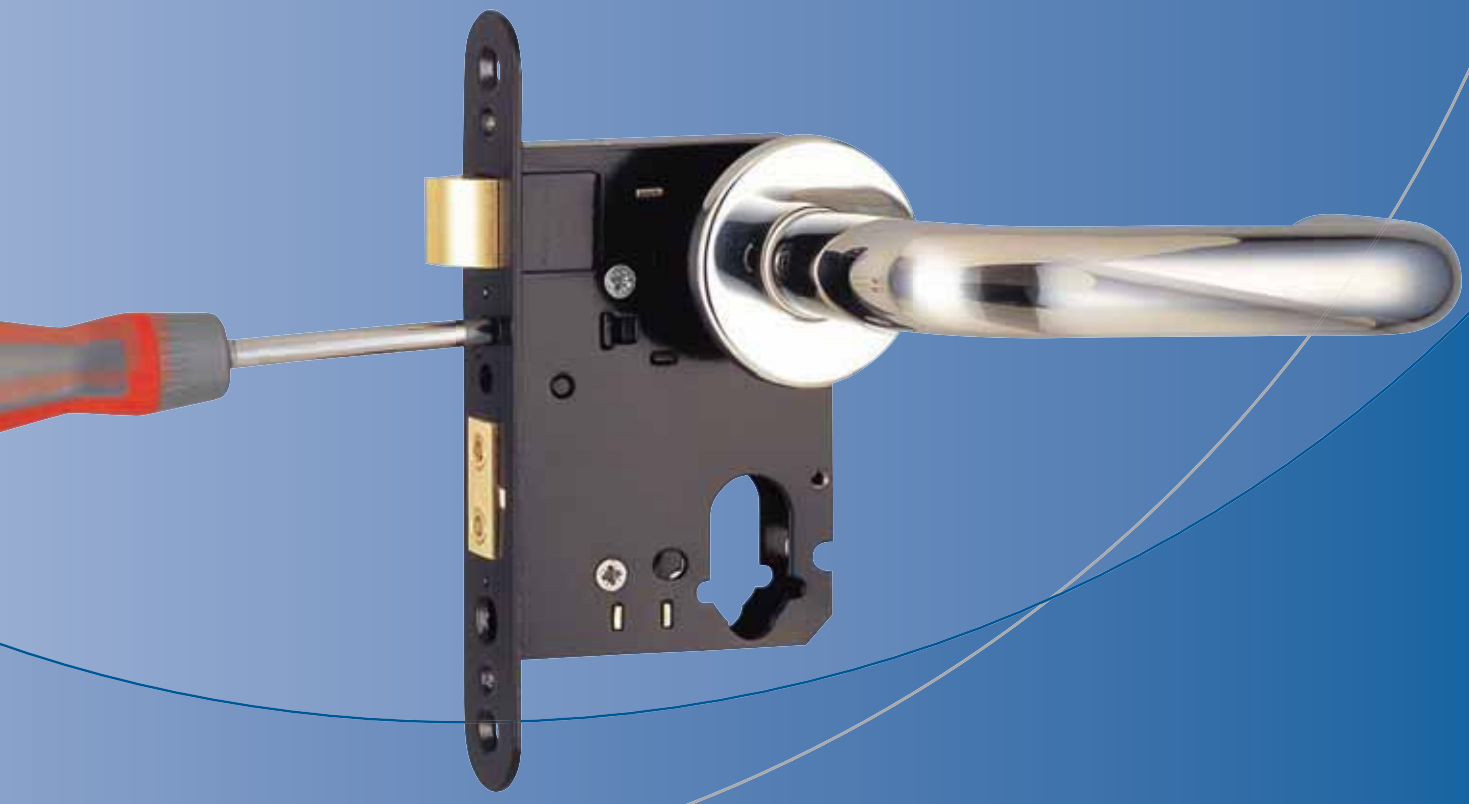

Ingersoll Rand
Security Technologies

The Disability Discrimination Act

How the DDA affects product selection

Briton

In October 2004 the Disability Discrimination Act (DDA) came into force, which has an affect on the security and hardware needs of a building. Although the DDA is civil rights legislation and does not directly relate to the design and construction of buildings it does have a close relationship with Part M and the guidance in Approved Document M (ADM) will be the first reference point for physical alterations in seeking to fulfill obligations under the DDA Part III. For circumstances where issues are not specifically covered in Part M, the guidance in BS 8300 will tend to be the next reference document to be consulted.



The main issues relating to accessibility for lock and latch cases in relation to accessibility are:

- The minimum distance from the door edge to the centre of the keyway – known as backset (BS8300 states a minimum of 54mm)
- The distance between the handle follower and the centre of the keyway – known as lock centres (BS8300 states a minimum of 72mm)
- 'Lever handles should be used wherever possible in conjunction with an upright mortice lock/latch' (BS 8300)

Security & Access Control

Control of access is vital if the security of buildings is not to be compromised.

Traditionally, master keyed systems have been the simple, cost effective way of managing controlled access to facilities where there are a variety of users with different areas of responsibility and different security priorities.

Whilst mechanical security still has an important part to play in the security of commercial buildings there is an increasing swing towards electronic access control. The complexity of such systems can encompass simple push button locks up to advanced biometric recognition to determine authorisation.

Electronic access control can also provide many advantages and benefits that can play a significant role in DDA access provision.

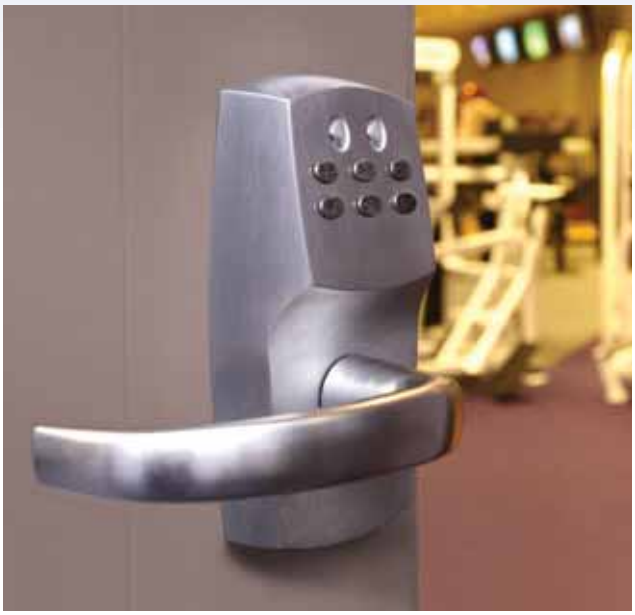

Mortice Cylinder Lockcases

Briton

Mortice cylinder lockcases are used in conjunction with cylinder locks. They are available to suit various cylinder shapes, such as oval profile, euro profile and Scandinavian cylinders. We have concentrated on euro profile lockcases and cylinders in this catalogue as they are the main cylinder type used in the UK. All our lockcases have easily reversible latch bolts, so that you do not have to worry about which hand the door is when selecting your lockcase.

For commercial buildings we recommend the use of lockcases with 72mm centres in line with the recommendation of BS8300. Both the Briton 5400 and Briton 5500 series euro profile cylinder mortice lockcases have been designed specifically to meet the requirements of the European standard EN12209 and are CE marked where appropriate.



Our range also includes a modular series of compact lockcases with 57mm centres featuring our unique X-tension feature. This feature enables the spring tension within the lock to be adjusted without removing the lockcase or dismantling the door furniture. It allows the lock to be 'fine tuned' to match the lever furniture, eliminating the unsightly appearance of drooping levers as a result of excessive use or abuse.



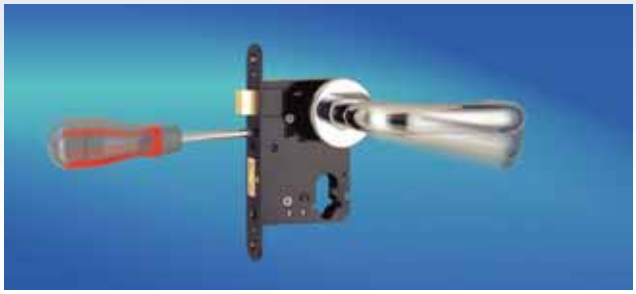

Replacing an existing lock

If you are replacing an existing mortice cylinder lockcase you can find out the size you require by simply measuring from the edge of the door to the centre of the cylinder aperture – this gives you the backset measurement.

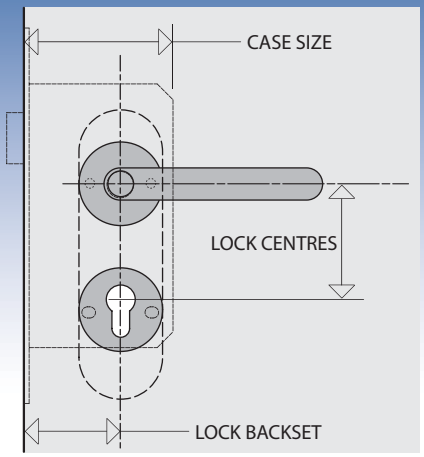

BRITON 5500 SERIES COMMERCIAL CYLINDER LOCKCASES

COMMON FEATURES OF THE RANGE

Designed for high quality commercial applications this range of euro profile lockcases have 72mm centres in line with the recommendations of BS8300 for DDA use. All locks in the range feature a hardened steel, drill resistant lockcase and deadbolt for optimum security and phosphor bronze follower brushes for reduced wear.

Comprising of deadlock, sashlock, bathroom lock, latch, nightlatch and escape sashlock this series is compatible with DIN standard euro profile cylinder ranges and carries a 10 year guarantee.

- Dimensional co-ordination across the range to DIN 18251 means that different lock functions can be easily interchanged and doors can be prepped in advance of fitting
- 60mm backset and 72mm centres across the range
- CE marked - conforms to the requirement of EN 12209. EN 179 only applies to the 5560 Escape Lock
- Quick reversible latch for easy on-site handling
- Smooth and quiet latch operation
- Single throw cylinder action for convenience
- Suitable for bolt-through furniture fixings
- Suitable for unsprung lever furniture

Finishes

Available in Satin Stainless Steel, Polished Stainless Steel and Polished Brass.

Available with square forends for morticing by hand or radius forends suitable for machine prepped doors.

TOP TIP

Using a 72mm Lockcase will help you to meet the requirements of BS8300 for DDA use.
We have indicated these products with a

BRITON 5510 CYLINDER DEADLOCK

- Suitable for use on doors without lever furniture that require locking
- Deadbolt can be operated from one side or both as required depending on the cylinder selected



5510.60.R

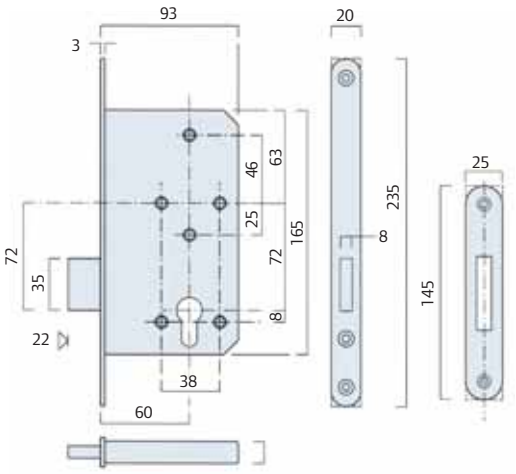

10 YEAR GUARANTEE

½ HOUR FIRE RATING
TIMBER DOORS

1 HOUR FIRE RATING
TIMBER DOORS

4 HOURS FIRE RATING
STEEL DOORS

CE

Code	Description	Backset	Forend	Finish	Barcode
5510.60.S	72mm Deadlock - Euro Profile	60mm	Square	SS	5 050640 000163
5510.60.R	72mm Deadlock - Euro Profile	60mm	Radius	SS	5 050640 000224

BRITON 5520 CYLINDER SASHLOCK

- Suitable for use on doors with lever furniture to withdraw the latchbolt
- Deadbolt can be operated from one side or both as required depending on the cylinder selected
- The cylinder to latch function enables the cylinder to withdraw the deadbolt on the first turn of the cylinder and the latch on the second.



5520.60.R

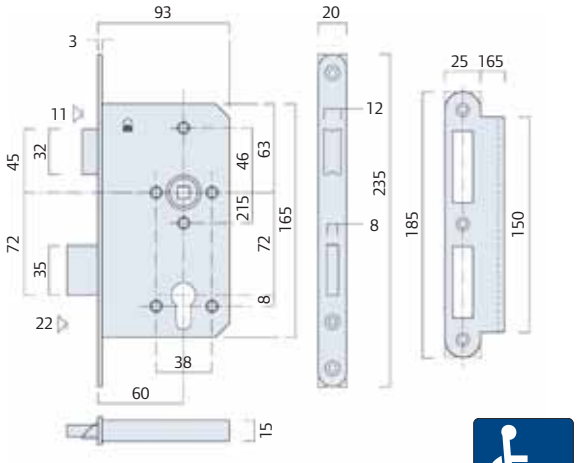

CE

10 YEAR GUARANTEE

½ HOUR FIRE RATING TIMBER DOORS

1 HOUR FIRE RATING TIMBER DOORS

4 HOURS FIRE RATING STEEL DOORS

Code	Description	Backset	Forend	Finish	Barcode
5520.60.S	72mm Sashlock - Euro Profile	60mm	Square	SS	5 050640 000293
5520.60.R	72mm Sashlock - Euro Profile	60mm	Radius	SS	5 050640 000170

BRITON 5530 BATHROOM LOCK

- Suitable for use on bathroom doors
- Can be operated by lever handles to withdraw the latchbolt from both sides
- The 10mm throw deadbolt is operated from the inside by a single turn of the thumbturn.
- An indicator and emergency release can be fitted to the outside of the door to operate in conjunction with the thumbturn



5530.60.R

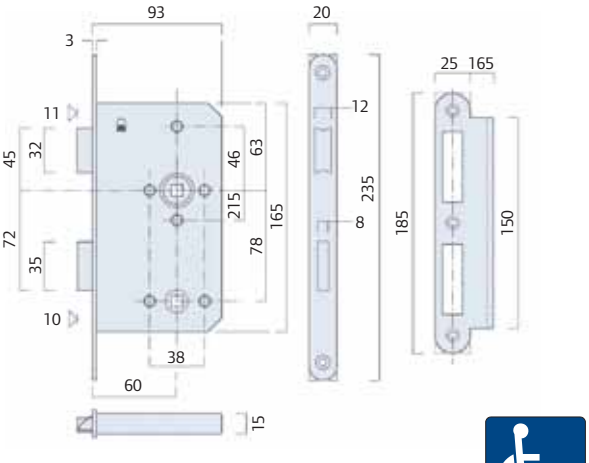

CE

10 YEAR GUARANTEE

½ HOUR FIRE RATING TIMBER DOORS

1 HOUR FIRE RATING TIMBER DOORS

4 HOURS FIRE RATING STEEL DOORS

Code	Description	Backset	Forend	Finish	Barcode
5530.60.S	72mm Bathroom Lock - Euro Profile	60mm	Square	SS	5 050640 000187
5530.60.R	72mm Bathroom Lock - Euro Profile	60mm	Radius	SS	5 050640 000248

BRITON 5540 LATCH

- Suitable for use on internal doors with lever furniture to withdraw the latchbolt where no locking function is required.



5540.60.R

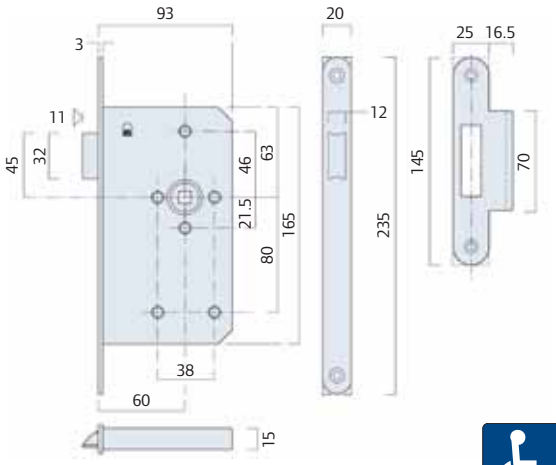

CE

10 YEAR GUARANTEE

½ HOUR FIRE RATING TIMBER DOORS

1 HOUR FIRE RATING TIMBER DOORS

4 HOURS FIRE RATING STEEL DOORS

Code	Description	Backset	Forend	Finish	Barcode
5540.60.S	72mm Latch - Dual Profile	60mm	Square	SS	5 050640 000194
5540.60.R	72mm Latch - Dual Profile	60mm	Radius	SS	5 050640 024633

BRITON 5550 CYLINDER NIGHTLATCH

- Nightlatch function is operated using a half set of levers, with the lever on the inside used to retract the latchbolt. A single cylinder operates from the outside with a single turn of the key to retract the latchbolt.
- A catch, operated from the forend, will hold the latchbolt in the withdrawn position.



5550.60.R

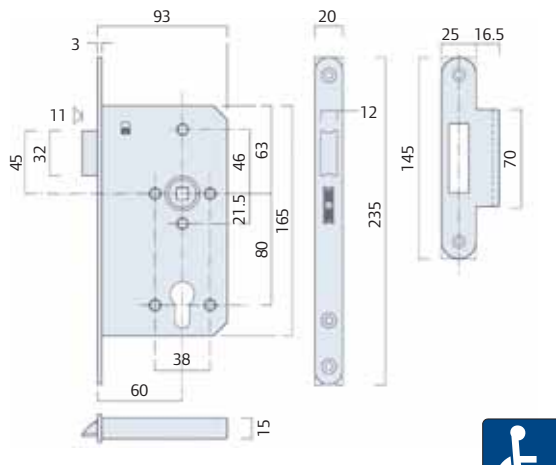

CE

10 YEAR GUARANTEE

½ HOUR FIRE RATING TIMBER DOORS

1 HOUR FIRE RATING TIMBER DOORS

4 HOURS FIRE RATING STEEL DOORS

Code	Description	Backset	Forend	Finish	Barcode
5550.60.S	72mm Nightlatch - Dual Profile	60mm	Square	SS	5 050640 000323
5550.60.R	72mm Nightlatch - Dual Profile	60mm	Radius	SS	5 050640 000200

BRITON 5560 ESCAPE SASHLOCK

- Deadbolt can be thrown and withdrawn from one or both sides depending on cylinder selected
- The cylinder to latch function enables the cylinder to withdraw the deadbolt on the first turn of the cylinder and the latch on the second.
- CE marked - conforms to the requirements of EN179. For EN179 compliance the lock must be fitted with a compatible lever furniture. For further information please contact 0800 834102.

TOP TIP

Does not include split follower function, so cannot be used with an external handle or an internal cylinder thumbturn



5560.60.R.SS

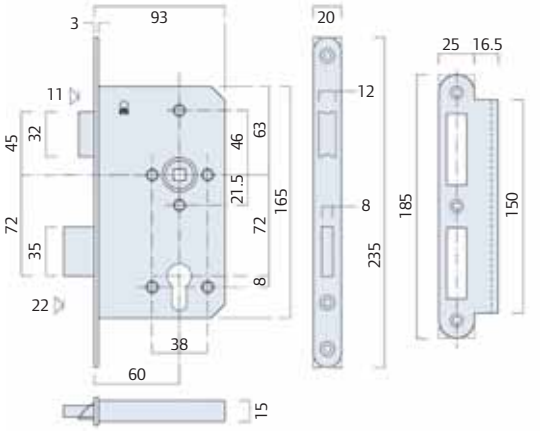

10 YEAR GUARANTEE

½ HOUR FIRE RATING TIMBER DOORS

1 HOUR FIRE RATING TIMBER DOORS

4 HOURS FIRE RATING STEEL DOORS

CE

Code	Description	Backset	Forend	Finish	Barcode
5560.60.S	72mm Escape Latch - Dual Profile	60mm	Square	SS	5 050640 000330
5560.60.R	72mm Escape Latch - Dual Profile	60mm	Radius	SS	5 050640 000217

5500 SERIES & 5400 SERIES LOCKCASE ACCESSORIES

Rebate Kits

- Silver anodised aluminium square rebate kits with Stainless steel strike plates. Replaces the standard strike plate supplied with the lockcase (suites only locks with square ended forends)
- Pack Contains 1 x aluminium rebate strike assembly (including square stainless steel strike plate), 1 x aluminium rebate lock packer, 1 x screw pack

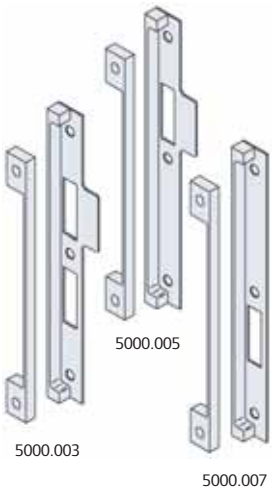

For Lockcases	For 13mm rebates	For 25mm rebates	Finish
5520,5530,5560,5420,5430	5000.003		SS
5520,5530,5560,5420,5430		5000.004	SS
5540,5550,5440	5000.005		SS
5540,5550,5440		5000.006	SS
5510,5410	5000.007		SS
5510,5410		5000.008	SS

TOP TIP

Rebate sets are suitable only for use with locks with square forends

BRITON 5400 SERIES CONTRACT CYLINDER LOCKCASES

COMMON FEATURES OF THE RANGE

A contract range of euro profile lockcases for commercial use having 72mm centres in line with the recommendations of BS8300 for DDA use.

Comprising of deadlock, sashlock, bathroom lock and latch this series is compatible with DIN standard euro profile cylinder ranges and carries a 5 year guarantee.

- Dimensional co-ordination across the range to DIN 18251 means that different lock functions can be easily interchanged and doors can be prepped in advance of fitting
- 60mm backset and 72mm centres across the range
- CE marked - conform to the requirements of EN 12209
- Quick reversible latch for easy on-site handling
- Double throw cylinder action for convenience
- Suitable for bolt-through furniture fixings
- Suitable for light unsprung lever furniture

Finishes

Available in Satin Stainless Steel and Polished Stainless Steel.

Available with square forends for morticing by hand or radius forends suitable for machine prepped doors.

TOP TIP

Using a 72mm Lockcase will help you to meet the requirements of BS8300 for DDA use.
We have indicated these products with a

BRITON 5410 CYLINDER DEADLOCK

- Suitable for use on doors without lever furniture that require locking
- Deadbolt can be operated from one side or both as required depending on the cylinder selected



5410.60.S

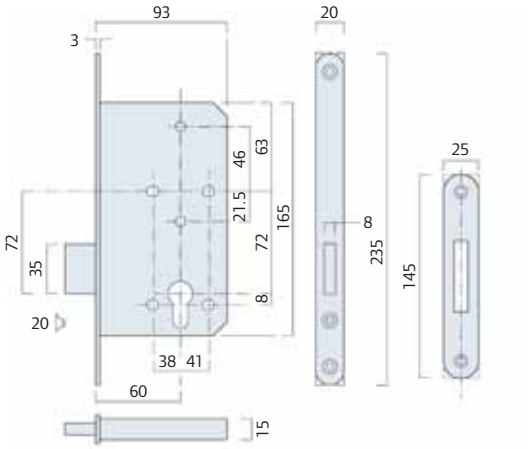

5 YEAR GUARANTEE

½ HOUR FIRE RATING TIMBER DOORS

1 HOUR FIRE RATING TIMBER DOORS

4 HOURS FIRE RATING STEEL DOORS

CE

Code	Description	Backset	Forend	Finish	Barcode
5410.60.S	72mm Deadlock - Euro Profile	60mm	Square	SS	5 050640 000040
5410.60.R	72mm Deadlock - Euro Profile	60mm	Radius	SS	5 050640 019011

BRITON 5420 CYLINDER SASHLOCK

- Suitable for use on doors with lever furniture to withdraw the latchbolt
- Deadbolt can be operated from one side or both as required depending on the cylinder selected
- The cylinder to latch function will operate both deadbolt and latch



5420.60.S

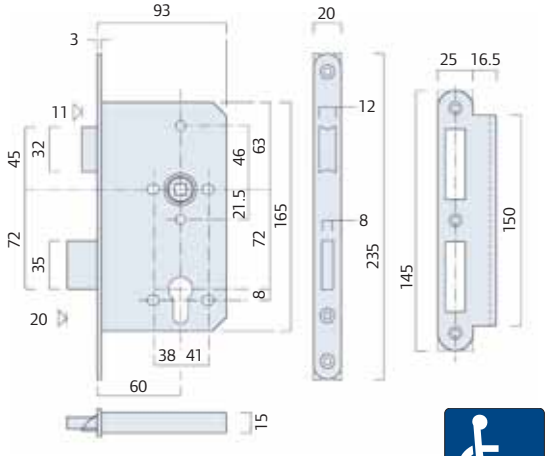

CE

5 YEAR GUARANTEE

½ HOUR FIRE RATING TIMBER DOORS

1 HOUR FIRE RATING TIMBER DOORS

4 HOURS FIRE RATING STEEL DOORS

Code	Description	Backset	Forend	Finish	Barcode
5420.60.S	72mm Sashlock - Euro Profile	60mm	Square	SS	5 050640 000057
5420.60.R	72mm Sashlock - Euro Profile	60mm	Radius	SS	5 050640 000019

BRITON 5430 BATHROOM LOCK

- Suitable for use on bathroom doors
- Can be operated by lever handles to withdraw the latchbolt from both sides
- The 10mm throw deadbolt is operated from the inside by a single turn of the thumbturn.
- An indicator and emergency release can be fitted to the outside of the door to operate in conjunction with the thumbturn



5430.60.S

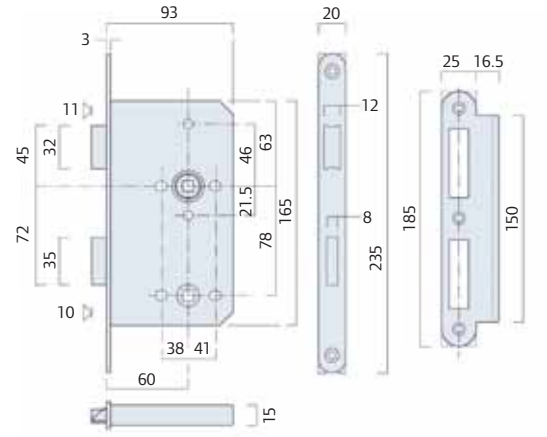

CE

5 YEAR GUARANTEE

½ HOUR FIRE RATING TIMBER DOORS

1 HOUR FIRE RATING TIMBER DOORS

4 HOURS FIRE RATING STEEL DOORS

Code	Description	Backset	Forend	Finish	Barcode
5430.60.S	72mm Bathroom Lock - Euro Profile	60mm	Square	SS	5 050640 000064
5430.60.R	72mm Bathroom Lock - Euro Profile	60mm	Radius	SS	5 050640 000026

BRITON 5440 LATCH

- Suitable for use on internal doors with lever furniture to withdraw the latchbolt where no locking function is required



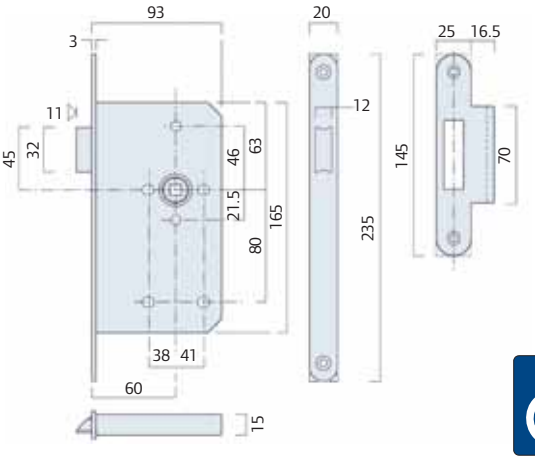

5 YEAR GUARANTEE

½ HOUR FIRE RATING TIMBER DOORS

1 HOUR FIRE RATING TIMBER DOORS

4 HOURS FIRE RATING STEEL DOORS

CE

Code	Description	Backset	Forend	Finish	Barcode
5440.60.S	72mm Latch - Euro Profile	60mm	Square	SS	5 050640 000071
5440.60.R	72mm Latch - Euro Profile	60mm	Radius	SS	5 050640 000033

5500 SERIES & 5400 SERIES LOCKCASE ACCESSORIES

Heavy Duty Box Strikes

- Solid zinc alloy strike boxes with durable black powder coated finish.
- Used in conjunction with the standard strike plate supplied with the lockcase.
- Suits locks with round and square ended forends
- Pack Contains – 1 x strike box, 1 x screw pack

Full Round & full Square Strike Plates

- Stainless steel strike plates to replace or use instead of the standard strike for common door preparation.
- Latch strikes are supplied for RH or LH applications
- Pack Contains 1 x full round or square strike plate to suite, 1 screw pack

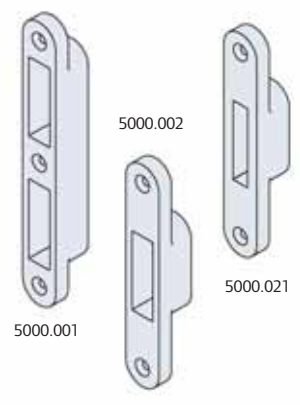

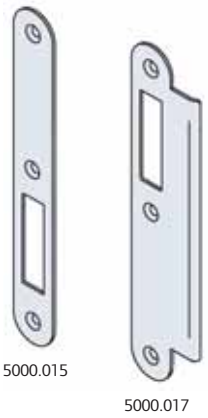

Code	Lock Type	To suit locks	Finish
5000.001	Latch & Bolt	5520, 5530, 5560, 5420,5430	Blk
5000.002	Latch only	5540, 5550, 5440	Blk
5000.021	Bolt only	5510, 5410	Blk
5000.015	Round	5510, 5410	SS
5000.016	Square	5510, 5410	SS
5000.017	Round RH	5540, 5550, 5440	SS
5000.018	Square RH	5540, 5550, 5440	SS
5000.019	Round LH	5540, 5550, 5440	SS
5000.020	Square RH	5540, 5550, 5440	SS



Clockwise closing (LH)

BRITON 5200 SERIES UK CYLINDER LOCKCASES

COMMON FEATURES OF THE RANGE

A range of cylinder lockcases with traditional UK dimensions (57mm centres).

Comprising of deadlock, sashlock, bathroom lock latch and nightlatch this series is compatible with most euro and oval profile cylinder ranges and carries a 10 year guarantee.

- 57mm backset and 57mm centres (euro profile)
- Dual profile cylinder capability – can be used with either euro or oval profile cylinders
- CE marked - conforms to the requirements of EN 12209
- Twist reversible latch for easy on site handing without dismantling the lockcase
- Single throw bolt with hardened steel rotating pins to protect the bolt from sawing
- Suitable for bolt-through furniture fixings
- Suitable for unsprung lever furniture
- Unique X-tension feature allows the spring tension within the lock to be adjusted

Finishes

Available in Satin Stainless Steel and Brass.

Available with square forends for morticing by hand or radius forends suitable for machine prepped doors.



Ever suffered with droopy handles? This range of locks feature a revolutionary design which enables the spring tension within the lock to be adjusted without removing the lockcase or dismantling the door furniture, thus eliminating the unsightly appearance of drooping levers as a result of excessive use or abuse.

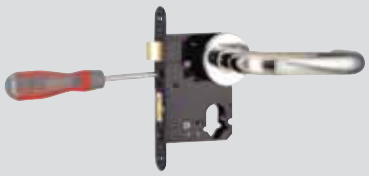

BRITON 5210 CYLINDER DEADLOCK

- Suitable for use on doors without lever furniture that require locking
- Deadbolt can be operated from one side or both as required depending on the cylinder selected



5210.57.S

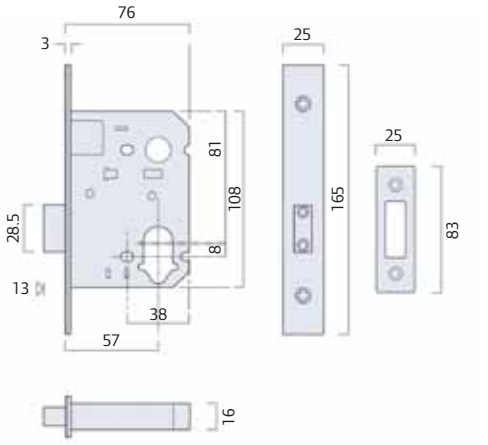



TIMBER DOORS TIMBER DOORS STEEL DOORS

CE

Code	Description	Backset	Forend	Finish	Barcode
5210.57.S	Deadlock - Dual Profile	57mm	Square	SS	5 050640 000521
5210.57.R	Deadlock - Dual Profile	57mm	Radius	SS	5 050640 000446

BRITON 5220 CYLINDER SASHLOCK

- Suitable for use on doors with lever furniture to withdraw the latchbolt
- Deadbolt can be operated from one side or both as required depending on the cylinder selected



5220.57.S

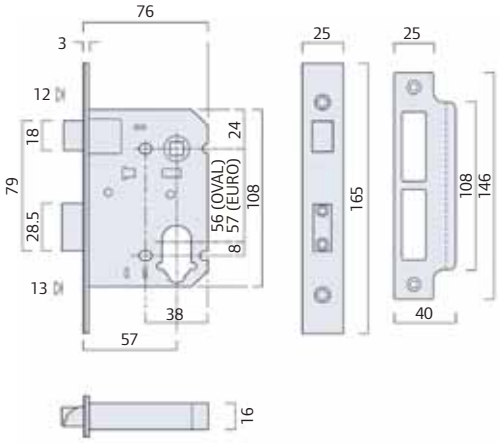

CE

10 YEAR GUARANTEE

½ HOUR FIRE RATING TIMBER DOORS

1 HOUR FIRE RATING TIMBER DOORS

4 HOURS FIRE RATING STEEL DOORS

Code	Description	Backset	Forend	Finish	Barcode
5220.57.S	Sashlock - Dual Profile	57mm	Square	SS	5 050640 000538
5220.57.R	Sashlock - Dual Profile	57mm	Radius	SS	5 050640 000453

TOP TIP

All 5200 Series lockcases are supplied suitable for euro profile cylinders as standard. To use with oval profile cylinders simply remove the conversion plate over the cylinder aperture, making sure that you replace the screw

BRITON 5230 BATHROOM LOCK

- Suitable for use on bathroom doors
- Can be operated by lever handles to withdraw the latchbolt
- The 13mm throw deadbolt is operated from the inside by a single turn of the thumbturn
- 5mm follower for thumbturn
- An indicator and emergency release can be fitted to the outside of the door to operate in conjunction with the thumbturn



5230.57.S

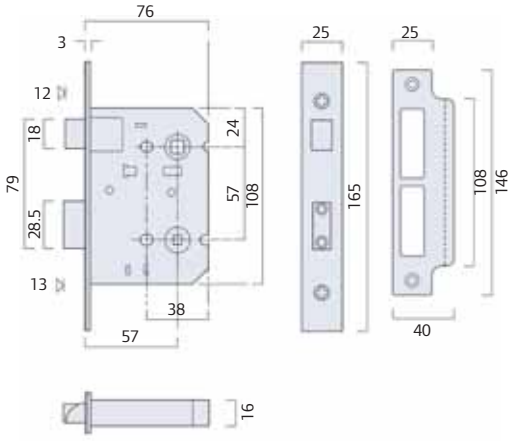

CE

10 YEAR GUARANTEE

½ HOUR FIRE RATING TIMBER DOORS

1 HOUR FIRE RATING TIMBER DOORS

4 HOURS FIRE RATING STEEL DOORS

Code	Description	Backset	Forend	Finish	Barcode
5230.57.S	Bathroom Lock	57mm	Square	SS	5 050640 000545
5230.57.R	Bathroom Lock	57mm	Radius	SS	5 050640 000460

BRITON 5240 LATCH

- Suitable for use on internal doors with lever furniture to withdraw the latchbolt where no locking function is required



5240.57.S

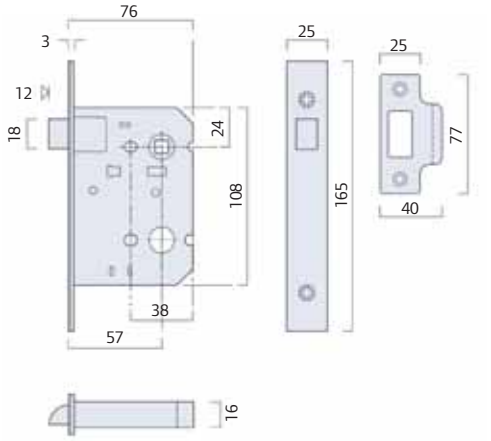



CE

Code	Description	Backset	Forend	Finish	Barcode
5240.57.S	Latch	57mm	Square	SS	5 050640 000552
5240.57.R	Latch	57mm	Radius	SS	5 050640 000477

BRITON 5250 CYLINDER NIGHTLATCH

- Operated using a half set of levers with the lever on the inside to retract the latchbolt and the cylinder on the outside to retract the latchbolt with a single turn of the key
- A catch operated from the forend will hold the latch bolt in the withdrawn position.
- Anti-thrust feature prevents manipulation of the latchbolt when the door is closed.



5250.57.S

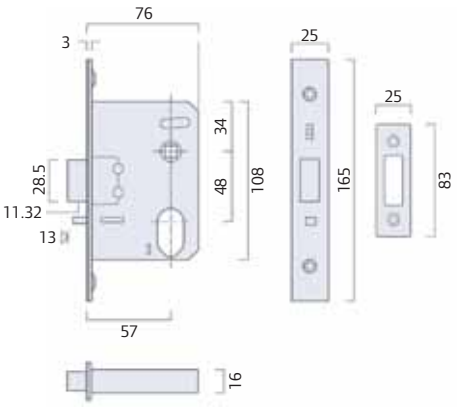



Code	Description	Backset	Forend	Finish	Barcode
5250.57.S	Nightlatch - Euro Profile	57mm	Square	SS	5 050640 021977

TOP TIP

When used on heavy doors we recommend the use of a finger pull

5200 SERIES LOCKCASE ACCESSORIES

Rebate Kits

- Silver anodised aluminium square rebate kits with grade 316 stainless steel or polished brass strike plates.
- Replaces the standard strike plate supplied with the lockcase (suits only locks with square ended forends.
- Pack Contains 1 x aluminium rebate packer-strike, 1 x aluminium rebate packer-lock, 1 square stainless steel strike plate, 1 screw pack

For Lockcases	For 13mm rebates	For 25mm rebates	Finish
5220,5230	5000.050		SS
5220,5230		5000.051	SS
5240	5000.052		SS
5240		5000.053	
5210	5000.054		SS
5210		5000.055	
5250	5000.056		SS
5250		5000.057	

Note: Also available in PB Finish

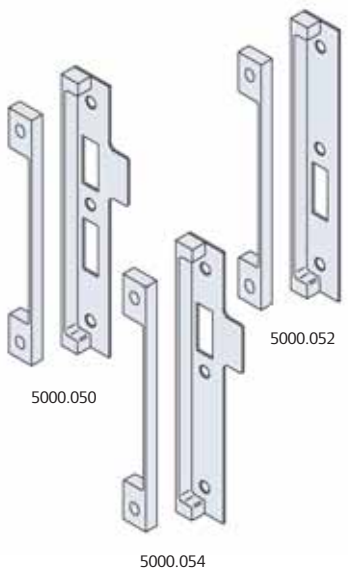

TOP TIP

Top Tip Rebate sets are suitable only for use with locks with square forends

EN 12209 is the European standard for lockcases

Wide ranging in its scope, it prescribes the test methodology, applications and product types for a wide range of physical properties including cycle testing, door size, suitability for use on fire door, security and corrosion resistance resulting in an 11 digit coding.

1. Category of Use	3 (1 - 3)	Defines the frequency of use. Grade 3 - high frequency of use by public or others with little incentive to exercise care and with a high chance of misuse
2. Durability	X (A - X)	Performance testing of the product through various cycle tests. Durability and Load On Latch (LOL) are identified Grade H - 200,000 cycles; 10N (LOL) GradeX - 200,000 cycles; 120N (LOL)
3. Door Size/Mass	8 (1 - 9)	The mass of the door that the product is suitable for: Grade 8 - Up to 200kg; 15N max closing force required
4. Fire Behaviour	1 (1)	Suitability for use on fire doors through testing to EN 1634 Grade 0 - Not approved for fire door use Grade 1 - Approved for fire door use subject to assessment
5. Safety	0 (0)	Grade 0 - where there is no safety requirement
6. Corrosion Resistance	G (0 - G)	Level of corrosion to EN 1670: Grade F - High resistance at -20˚C to +80˚C Grade G - Very high resistance at -20˚C to +80˚C
7. Security	4 (1 - 7)	Security and drill resistance levels are identified Grade 4 - high security with no drill resistance
8. Field of Application	B (A - T)	Defines the applications the product is suitable for: Grade B - Suitable for hinged doors in a mortice application and without forend support
9. Type of Operation	A (0 - H)	Defines the type of key operation and locking type: Grade 0 - Not applicable Grade A - Cylinder lock or latch with manual locking Grade C - Cylinder lock or latch with intermediate locking
10. Type of Spindle Operation	0 (0 - 4)	Method of operation and compatible door furniture Grade 0 - Lock or latch without follower Grade 2 - Lock or latch for unsprung lever handle operation
11. Key Identification Requirement	0 (0)	Number of detaining elements and effective differs Grade 0 - Indicates no requirement

Cylinders

The use of cylinder locks is a very flexible and sophisticated means of providing security at most doors and has a number of advantages over other methods of door locking. They give you the ability to:



- Select the most appropriate combination of lockcase and cylinder function
- Match the level of security to the precise needs of each door in a building
- Upgrade security levels as the needs of the building or its occupants change
- Provide sophisticated masterkeying and key control capabilities where access to multiple doors can be allowed or restricted to varying personnel

Cylinders - The CISA Range

The CISA range of cylinders include oval, euro and Scandinavian profiles, which can be supplied either standard differ, keyed alike, keyed to pass or master keyed. This catalogue focuses on euro profile cylinders as they make up the majority of the UK market. For further information on our complete range of cylinders contact us on 0191 430 2500.

Bumping and Snapping

Bumping and snapping are the latest forms of cylinder attack sweeping Europe. The problem is being exacerbated by internet sites spreading the word amongst the criminal community.

We pride ourselves on being at the forefront of the market with our CISA cylinders and we are able to offer tried and tested cylinders to provide protection from just these kinds of attack. Our Astral S and AP3 S ranges both incorporate features designed to make them bump and snap resistant.

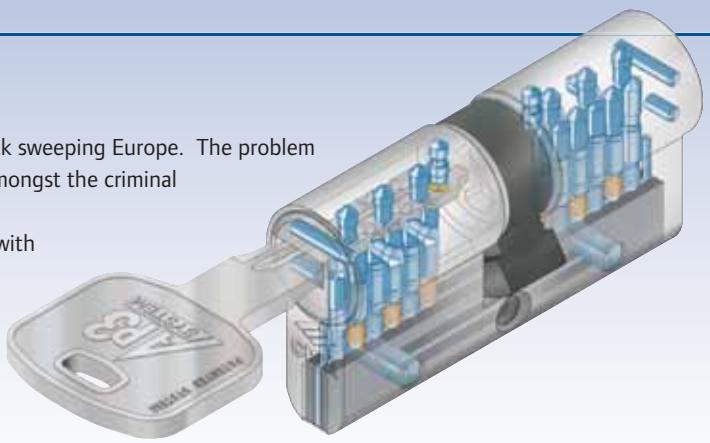

Selecting the correct cylinder length

Specifying the correct cylinder length is important not only for aesthetic reasons, but also for security. The cylinder must be fitted as flush as possible with the surrounding hardware in order to reduce the opportunity for the cylinder to be removed. By reducing movement over time this will also increase the longevity of the cylinder.

When choosing a cylinder, three factors should be considered:

- Thickness of door
- Thickness of hardware, eg. Escutcheons or backplate
- Position of the lock within the door

The overall length of the cylinder should be just larger than the combined thickness of the door D and the backplates or escutcheons X.

When using a thumbturn, an additional 2mm clearance is recommended.

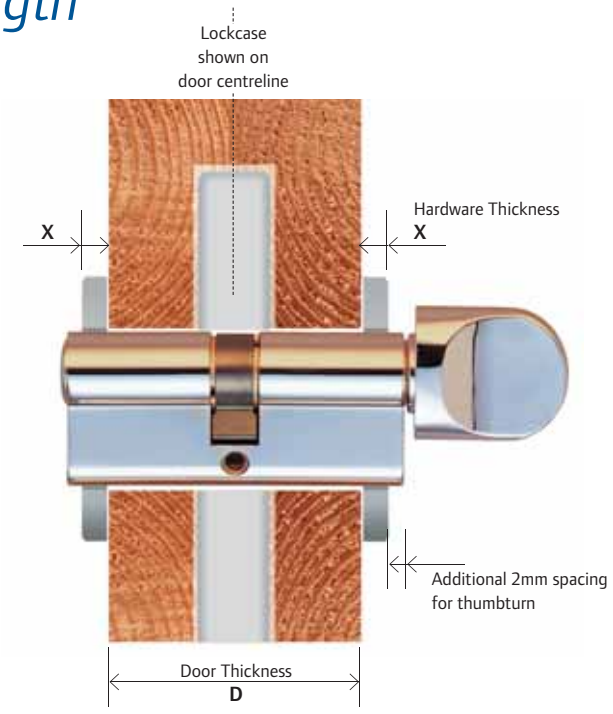

CISA ASTRAL S KITEMARKED BUMP & SNAP RESISTANT CYLINDERS

COMMON FEATURES OF THE RANGE

Traditional cylinders used in most UPVC doors are open to attack from unscrupulous thieves, who are using the internet to spread the word on how to attack them.

CISA's latest cylinder ranges have been developed to combat this ever increasing problem and provide levels of high security and protection against these methods of attack. In developing these products we have taken action not only to defend their locks but to offer a visual deterrent to opportunist thieves. Their unique visual snap resistant core is designed to deter thieves from trying to attack the lock and thus prevent damage to the door.

The Astral S cylinder range is Kitemark approved making it suitable for both commercial and residential use. Most insurance companies stipulate that all external doors should be fitted with a Kitemarked locking device.

For added convenience the Astral S cylinders are completely interchangeable with the standard Astral range allowing them to be used specifically where increased security is required.

The drawing below shows you the added protection we have incorporated into the range.

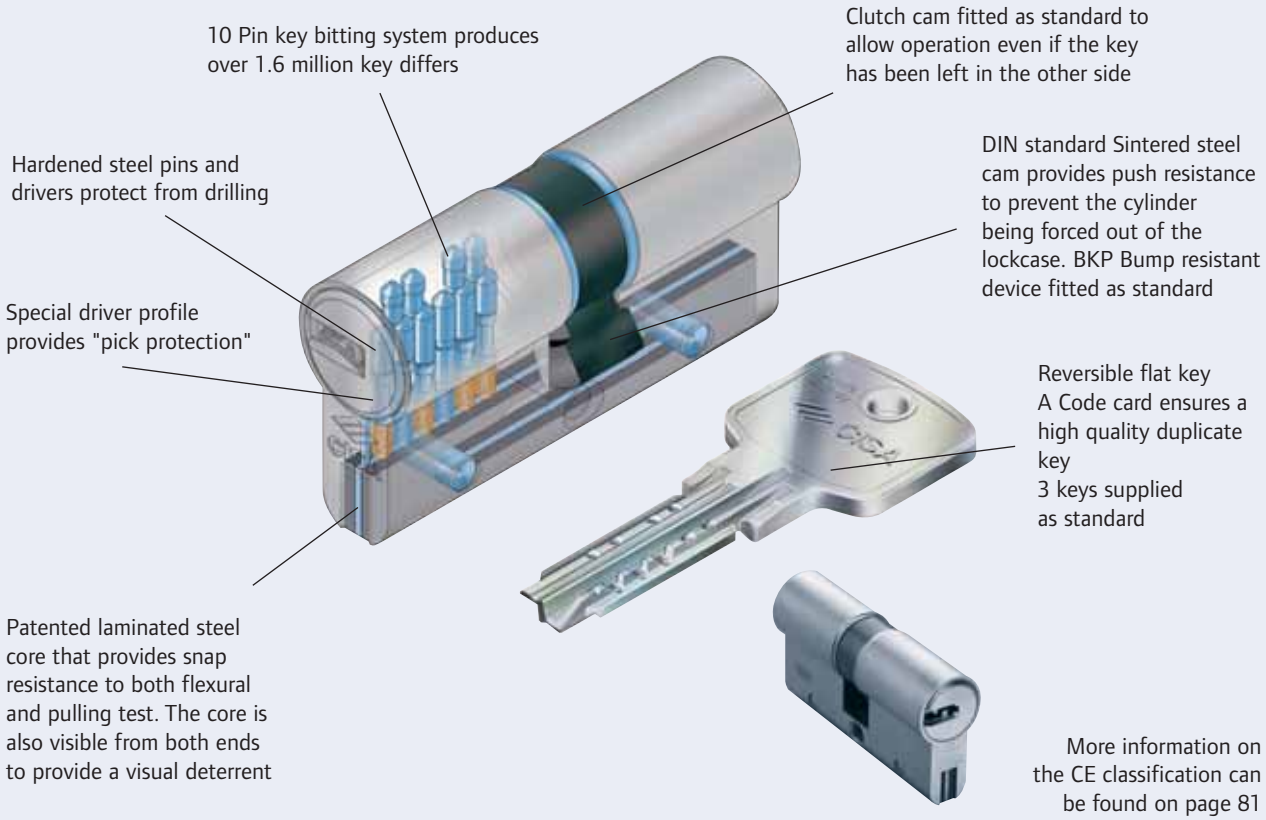

More information on the CE classification can be found on page 81

	EN1303:2005	
Attack resistant GRADE 1	Durability GRADE 6	Key Security GRADE 6

BS 1303:2005
Licence 532990

2 YEAR GUARANTEE

½ HOUR FIRE RATING
TIMBER DOORS

4 HOURS FIRE RATING
STEEL DOORS

Code	Description	Size	Finish
OA3S1.07	Astral S Euro Double	30/30mm	SB / SNP
OA3S1.13	Astral S Euro Double	35/35mm	SB / SNP
OA3S1.18	Astral S Euro Double	40/40mm	SB / SNP
OA3S2.07	Astral S Euro Cylinder & Turn	30/30mm	SB / SNP
OA3S2.13	Astral S Euro Cylinder & Turn	35/35mm	SB / SNP
OA3S2.18	Astral S Euro Cylinder & Turn	40/40mm	SB / SNP

CISA ASTRAL CYLINDERS

- Ideal for use on commercial buildings requiring a convenient masterkey system.
- Ability to have up to 63000 different cylinders on a single system
- 10 pin key bitting system offers over 1.6 million differs
- Anti-pick profiled brass pins and drivers
- Hardened steel pin and driver in first pin position protects from drilling
- Reversible flat key (3 keys supplied as standard)
- Code card ensures a high quality duplicate key
- DIN standard Sintered steel cam provides push resistance to prevent the cylinder from being forced out of the lockcase.



OA312.07



TIMBER DOORS STEEL DOORS

Code	Description	Size	Finish
OA310.07	Astral Euro Double	30/30mm	SB / SNP
OA310.13	Astral Euro Double	35/35mm	SB / SNP
OA310.18	Astral Euro Double	40/40mm	SB / SNP
OA312.07	Astral Euro Cylinder & Turn	30/30mm	SB / SNP
OA312.13	Astral Euro Cylinder & Turn	35/35mm	SB / SNP
OA312.18	Astral Euro Cylinder & Turn	40/40mm	SB / SNP

CISA 7500 CYLINDERS

- A high quality comprehensive cylinder range with masterkeying capability, suitable for medium to high security applications
- Key profile with patented technology which prevents unauthorised key duplication
- Patented system uses a unique 'undercut' key profile which lifts a special 'check pin' inside the cylinder providing additional security
- 6 pin tumbler system with additional 'check pin'
- Anti-barricade function prevents the thumbturn from being held to prevent the cylinder from being unlocked making it ideal for secure institutions
- Classroom function allows cylinder to be looked from outside, but still have the ability to be opened from the inside
- Construction keying allows a single key to be used during a building's construction, which is rendered inoperative as soon as the actual keys are utilised





TIMBER DOORS TIMBER DOORS STEEL DOORS

Code	Description	Size	Finish
7510.ME45	Euro Single Cylinder MK	45 (35-10)mm	SNP
7520.ME3535	Euro Double Cylinder MK	70 (35-35)mm	SNP
7530.ME3535T	Euro Cylinder & Turn MK	70 (35-35)mm	SNP
7520.ME4555	Euro Double Cylinder MK	100 (45-55)mm	SNP
7530.ME4030T	Euro Cylinder & Turn	70 (4030mm	SNP

Note: Differ Keys not included

CISA C2000 CYLINDERS

- Providing a medium level of physical security these cylinders are an economical option for either singles or master keyed systems.
- Hardened steel pin and driver in first position protects from drilling
- 5 pin key bitting system offers over 30000 key differs
- Anti-pick profiled brass pins and drivers
- DIN standard Sintered steel cam provides push resistance to prevent the cylinder being forced out of the lockcase
- 3 keys supplied as standard



0G300.07

2 YEAR GUARANTEE

½ HOUR FIRE RATING
TIMBER DOORS

4 HOURS FIRE RATING
STEEL DOORS

Code	Description	Size	Finish
OG300.07	C2000 Euro Profile Double Cylinder	30/30mm	SB / SNP
OG300.13	C2000 Euro Profile Double Cylinder	30/35mm	SB / SNP
OG300.18	C2000 Euro Profile Double Cylinder	40/40mm	SB / SNP
OG302.07	C2000 Euro Profile Cylinder & Turn	30/30mm	SB / SNP
OG302.13	C2000 Euro Profile Double Cylinder	35/35mm	SB / SNP
OG302.18	C2000 Euro Profile Double Cylinder	40/40mm	SB / SNP

LEGGE VALUE CYLINDERS

- Euro profile replacement cylinders
- 3 Keys



Code	Description	Size	Finish	Barcode
P801	Single Cylinder - Euro Profile	46mm	PB	5 010564 031209 >
P801	Single Cylinder - Euro Profile	46mm	SCP	5 050640 022561 >
P802	Double Cylinder - Euro Profile	35/35mm	PB	5 010564 031223 >
P802	Double Cylinder - Euro Profile	35/35mm	SCP	5 050640 022578 >
P803	Cylinder & Turn - Euro Profile	35/35mm	PB	5 010564 031247 >
P803	Cylinder & Turn - Euro Profile	35/35mm	SCP	5 050640 022585 >
P805	Double Cylinder - Euro Profile	35/45mm	PB	5 010564 031285 >
P805	Double Cylinder - Euro Profile	35/45mm	SCP	5 050640 022592 >
P806	Cylinder & Turn - Euro Profile	35/45mm	PB	5 010564 031292 >
P806	Cylinder & Turn - Euro Profile	35/45mm	SCP	5 050640 022608 >

Security - Portable

Security is not always related to a building and there are many occasions where it may be necessary to have flexible security that can be carried around or relocated as required. Our portable security range includes padlocks, hasps, chains, cables and ground anchors providing options for both commercial and residential use.

Padlocks are a very convenient and flexible locking solution, often used for items such as sheds, gates, vans and tool boxes. They are available in a variety of strength, durability and corrosion ratings to suit the level of security required.



Ingersoll Rand
Security Technologies

Padlocks

Kryptonite offer a wide range of padlocks covering all levels of security suitable for both commercial and residential use. They can be supplied individually keyed or keyed alike for increased convenience.

Selecting a Padlock

When selecting a padlock the main things to consider are:

1) **Level of security** required
2) Distance required to secure shackle in padlock (determines **Shackle length**)
3) Main **location** it will be secured in

1) - Level of Security

For ease of selection we have categorised our padlocks into 3 security levels:

Low – Medium – High

These categories are determined by their construction and the materials used.

2) - Shackle Length

The shackle is the u-shaped metal bar used to attach the lock to the hasp or chain. There are three styles of shackle shown below. When slecting your padlock it is important to consider the distance that you will have to secure the shackle into the lock.



Standard Length



Long Shackle



Closed Shackle

TOP TIP

The shorter the shackle length the less vulnerable to attack it is, therefore a closed shackle padlock will be more secure than a long shackle padlock.

3) - Location

All our padlocks are suitable for indoor use, however for outdoor use we recommend using a laminated or marine grade padlock to reduce the risk of corrosion. Our marine grade padlock has been designed specifically for locations close to the sea and has undergone a 1000 hour salt spray test.



BRASS PADLOCKS

- Designed for use in Medium to High risk locations
- Hardened steel shackle
- Double deadbolt locking mechanism increased strength
- Solid brass body and cylinder





72001885028





720018850267

Code	Description	Padlock Width	Keyed	Barcode
720018850267	Brass	38mm	KD	7 200188 502676 >
720018850281	Brass	38mm	KA	7 200188 502812 >
720018850298	Brass	50mm	KD	7 200188 502980 >

LAMINATED STEEL PADLOCKS

- Designed for use in Low to Medium risk locations
- Hardened steel shackle
- Double deadbolt locking mechanism
- Plated, laminated steel body





720018850373





720018850380





720018850366

Code	Description	Padlock Width	Keyed	Barcode
720018850373	Laminated Steel	50mm	KD	7 200188 503734 >
720018850359	Laminated Steel	44.5mm	KD	7 200188 503598 >
720018850366	Laminated Steel Long Shackle	44.5mm	KD	7 200188 503666 >

MARINE GRADE CHROME PLATED BRASS PADLOCK

- Designed for use in Medium to High risk locations
- Hardened steel shackle and double deadbolt locking mechanism for increased strength
- Corrosion resistant nickel-plated pins in cylinder
- Exceeds ASTM, ISO and DIN standards in 1000 hour salt spray test




720018850137





72001885120

Code	Description	Padlock Width	Keyed	Barcode
720018850137	Marine Grade	38mm	KD	7 200188 501372 >
720018850144	Marine Grade	50mm	KD	7 200188 501440 >
720018850120	Marine Grade	25mm	KD	7 200188 501204 >

SOLID STEEL PADLOCK

- Designed for use in the Highest risk locations
- Hardened solid steel padlock with Molybdenum steel shackle for greater resistance to sawing, cutting and prying attacks
- Double deadbolt locking mechanism
- 6-pin brass cylinder is rekeyable and changeable



720018851219



720018851134

Code	Description	Padlock Width	Keyed	Barcode
720018851233	Solid Steel	63.5mm	KA/KD	7 200188 512330 >
720018851219	Solid Steel	63.5mm	KA/KD	5 027968 501023 >
720018851134	Solid Steel	44.5mm	KA/KD	7 200188 511340 >

STAINLESS STEEL COMBINATION PADLOCK

- Designed for use in Low to medium risk locations
- Hardened steel shackle
- Right-Left-Right dial mechanism offers 64,000 combinations



720018850175

Code	Description	Padlock Width	Barcode
720018850175	Stainless Steel Combination	50mm	7 200188 501754 >

STRONGHOLD SECURITY ANCHOR

- Extra-tough theft resistant locking point for use indoors and out
- Provides protection from ride-away, roll-away and lift-away theft
- 5/8" Hardened carbon alloy steel shackle lays flat when not in use
- Weatherproof, impact resistant body
- Available in both above-ground and in-ground versions
- Recommended for both commercial and residential installation

Above-ground - includes 16mm cement anchors, bolts and masonry bits

In-ground - reinforced steel anchor bars can be buried up to 250mm depth



720018330202



720018330219

Code	Description	Case Size	Barcode
720018330202	Stronghold Security Above Ground	20.32 x 29.85 x 41.9cm	7 200183 302028 >
720018330219	Stronghold Security Anchor In Ground	13.97 x 27.31 x 45.09cm	7 200183 302196 >

CHAIN AND PADLOCK

- Designed for use in the Highest risk locations
- Chain made from triple heat-treated Boron Manganese steel
- Unique trapezoidal-shaped link resists attacks from bolt cutters, saws hammers and chisels



7200188102009

Code	Description	Cable Length	Barcode
720018810209	Chain and Padlock	167.3cm	7 200188 102098 >

CINCH RING SECURITY CHAIN

- Designed for use in the Highest risk locations
- Chain made from triple heat-treated Boron Manganese steel
- Unique trapezoidal-shape link resists attacks from bolt cutters, saws hammers and chisels
- Cinch ring design for more useable length and ease of use with any high security padlock


720018810230

Code	Description	Cable Length	Barcode
720018810230	Cinch Ring Security Chain	68.6cm	7 200188 102302 >

FLEXIBLE STEEL CABLE

- Designed for use in Medium to High risk locations
- Braided steel vinyl coated cable with extra long oversized swages
- Double loop design allows cinching for more useable length
- Flexible lock-up options with any high security padlock


720018830412

Code	Description	Cable Length	Barcode
720018830405	Flexible Steel Cable	213.4cm	7 200188 304058 >
720018830412	Flexible Steel Cable	457.2cm	7 200188 304126 >
720018830504	Flexible Steel Cable	914.4cm	7 200188 305048 >

RESETTABLE COMBINATION CABLE

- Designed for use in Low to Medium risk locations
- Vinyl coated steel cable for flexible security
- Tough integrated 4-digit resettable combination lock



720018830207

Code	Description	Cable Length	Barcode
720018830207	Resettable Combination Cable	152.4cm	7 200188 302078

KEY CABLE

- Designed for use in Low to medium risk locations
- Vinyl coated steel cable for flexible security
- Tough integrated key lock with weather resistant cylinder



720018830139

Code	Description	Cable Length	Barcode
720018830139	Key Cable	152.4cm	7 200188 301392

LOCKING HITCH PIN

- Serious security for receiver style trailer hitches and hitch-mount racks
- High-security hardened steel locking head swivels for easy use in tight locations
- Double chrome plated for corrosion resistance
- Protective keyway cover



720018360216

Code	Description	Barcode
720018360216	Locking Hitch Pin	7 200183 602166

HITCH PIN SECURITY CABLE

- For use with all Kryptonite locking hitch pins
- Secure gear with cable then slide loop end onto hitch pin and lock into place
- Braided steel cable has increased resistance to cutting and sawing
- Extra large loop end for cinching



720018360223

Code	Description	Cable Length	Barcode
720018360223	Hitch Pin Security Cable	30.5cm	7 200183 602234

SECURITY HASPS

- Hardened steel shackles resist prying, cutting and sawing attacks



720018855169



720018855118



720018994848

Code	Description	Case Size	Barcode
720018855118	Flexible Steel Hasp	26.49 x 13.49 x 34.49cm	7 200188 551186
720018855149	Steel Bar Hasp	26.49 x 13.49 x 34.49cm	7 200188 551490
720018994848	Steel Bar Hasp	25.4 x 12.07 x 24.13cm	7 200189 948480

VEHICLE HASP

- Hardened steel shackles resists, prying, cutting and sawing attacks
- Ideal for vehicle security

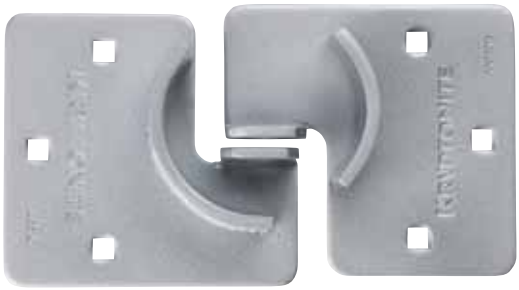

720018855101

Code	Description	Case Size	Barcode
720018855101	Security Hasps	26.37 x 21.59 x 21.59cm	7 200188 551018

SHACKLE-LESS PADLOCK

- Designed for use in the highest risk locations
- Hardened steel shackle resists, prying, cutting and sawing attacks
- Designed for use with vehicle hasp above





72001855156

Code	Description	Padlock width	Keyring	Barcode
72001855156	Shackle-less padlock	73mm case	KA/KD	7 200188 551568

Door Furniture

The Briton Contract Series of door hardware is a compact range of door furniture which is ideally suited for use with the Briton 5400 contract Lock Series. The Series features a selection of rose mounted lever furniture with matching escutcheons and a co-ordinated pull handle to satisfy the majority of door functions Briton Contract leversets have been successfully included in fire door tests to EN 1634 for use on 2 hour timber fire doors and 4 hour steel doors.



Ingersoll Rand
Security Technologies

Which Furniture for which lock?

Briton

The selector below has been designed to assist you in choosing the most appropriate combination of door furniture and lockcase. Full details of the Briton 5400 Series of mortice lockcases can be found on page 42.

Lever Sets

Description	Latch	Lever Lock	Euro profile cylinder lock	Bathroom lock	Oval profile cylinder lock	
Return to door lever on rose Escutcheon Recommended Briton Contract Lock	4140.R.SS - 5440	4140.R.SS 4010.8.SS -	4140.R.SS 4020.8.SS 5420	4140.R.SS 4030.8.SS 5430	4140.R.SS 4050.8.SS -	
Straight mitred lever on rose Escutcheon Recommended Briton Contract Lock	4240.R.SS - 5440	4240.R.SS 4010.8.SS -	4240.R.SS 4020.8.SS 5420	4240.R.SS 4030.8.SS 5430	4240.R.SS 4050.8.SS -	
Straight lever on rose Escutcheon Recommended Briton Contract Lock	4340.R.SS - 5440	4340.R.SS 4010.8.SS -	4340.R.SS 4020.8.SS 5420	4340.R.SS 4030.8.SS 5430	4340.R.SS 4050.8.SS -	
Curved lever on rose Escutcheon Recommended Briton Contract Lock	4440.R.SS 5440	4440.R.SS 4010.8.SS -	4440.R.SS 4020.8.SS 5420	4440.R.SS 4030.8.SS 5430	4440.R.SS 4050.8.SS -	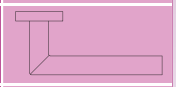
Coupe lever on rose Escutcheon Recommended Briton Contract Lock	4540.R.SS - 5440	4540.R.SS 4010.8.SS -	4540.R.SS 4020.8.SS 5420	4540.R.SS 4030.8.SS 5430	4540.R.SS 4050.8.SS -	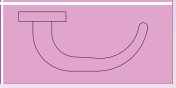

Pull Handles

Product Reference	Centres	Fixing Type
4100.20.300.1.SS	300	Bolt Through
4100.20.300.2.SS	300	Back to Back
4100.20.400.1.SS	400	Bolt Through
4100.20.400.2.SS	400	Back to Back

Durability

Manufactured from Grade 304 stainless steel.
Briton Contract Levers have all been successfully tested to EN 1906 Grade 4.
Lever and rose assemblies are bolt through fixed for durability and security using 'Securex' head bolts.

Finishes

Satin stainless steel finish is compatible with a wide range of other door hardware allowing complete door hardware packages to be visually integrated.
Having achieved a 240 hour neutral salt spray test to BS 1670, the Contract Series has a high resistance to corrosion.

Installation & Fixings

Levers are pre-fixed to the rose to ease installation and provide a robust fixing. All fixings are concealed by push on rose and escutcheon covers.
All leversets are 19mm diameter and are supplied with a spindle and bolt through fixings suitable for door thicknesses from 34mm to 54mm.
All pull handles are 19mm diameter and are supplied with fixings to suit 44mm door thicknesses.
All roses and escutcheons are 52mm diameter and 8mm thick.



TIMBER DOORS STEEL DOORS

BRITON CONTRACT FURNITURE

COMMON FEATURES OF THE RANGE

A compact range of commercial door hardware designed to satisfy the majority of door functions.

- Designed to suit most mortice lockcases
- Bolt through fixed for durability and security
- 5 design options
- Co-ordinating escutcheons to suit most lock functions, including euro profile cylinder, oval profile, lever key and bathroom functions
- Leversets have been successfully tested to EN 1906 Grade 4
- High corrosion resistance (240 hour salt spray test to BS 1670)
- Satin stainless steel
- 5 year guarantee

TOP TIP

Using a return to door leverset or a 400mm pull handle will help you to meet the requirements of BS8300 for DDA use. We have indicated these products with a

BRITON CONTRACT LEVERSETS



4140.R.SS

5 YEAR GUARANTEE | 2 HOURS FIRE RATING | 4 HOURS FIRE RATING

TIMBER DOORS | STEEL DOORS

Code	Description	Finish	Barcode
4140.R	Lever on Rose - Return Door	SS	5 050640 028501



4240.R.SS

5 YEAR GUARANTEE | 2 HOURS FIRE RATING | 4 HOURS FIRE RATING

TIMBER DOORS | STEEL DOORS

Code	Description	Finish	Barcode
4240.R	Lever on Rose - Straight Mitred	SS	5 050640 028518

Note: All leversets are 19mmØ and are supplied with a spindle and bolt through fixings suitable for door thicknesses from 34mm to 54mm.



4340.R.SS

5 YEAR GUARANTEE | 2 HOURS FIRE RATING TIMBER DOORS | 4 HOURS FIRE RATING STEEL DOORS

Code	Description	Finish	Barcode
4340.R	Lever on Rose – Straight	SS	5 050640 028525



4440.R.SS

5 YEAR GUARANTEE | 2 HOURS FIRE RATING TIMBER DOORS | 4 HOURS FIRE RATING STEEL DOORS

Code	Description	Finish	Barcode
4440.R	Lever on Rose – Curved Mitred	SS	5 050640 028532



4540.R.SS

5 YEAR GUARANTEE | 2 HOURS FIRE RATING TIMBER DOORS | 4 HOURS FIRE RATING STEEL DOORS

Code	Description	Finish	Barcode
4540.R	Lever on Rose - Coupe	SS	5 050640 028549

Note: All leversets are 19mmØ and are supplied with a spindle and bolt through fixings suitable for door thicknesses from 34mm to 54mm.

PULL HANDLES



4100.20.300.1.SS

5 YEAR GUARANTEE | 1 HOUR FIRE RATING | 4 HOURS FIRE RATING

TIMBER DOORS | STEEL DOORS

Code	Description	Finish	Barcode
4100.20. 300.1	Bolt through Pull Handle 19x300mm	SS	5 050640 028587



4100.20.300.2

5 YEAR GUARANTEE | 1 HOUR FIRE RATING | 4 HOURS FIRE RATING

TIMBER DOORS | STEEL DOORS

Code	Description	Finish	Barcode
4100.20.300.2	Back to Back Pull Handles 19x300mm	SS	5 050640 028594



4100.20.400.1

5 YEAR GUARANTEE | 1 HOUR FIRE RATING | 4 HOURS FIRE RATING

TIMBER DOORS | STEEL DOORS

Code	Description	Finish	Barcode
4100.20.400.1	Bolt through Pull Handle 19x400mm	SS	5 050640 028600

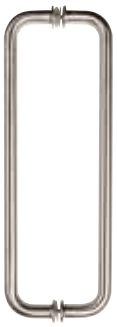

4100.20.400.2

5 YEAR GUARANTEE | 1 HOUR FIRE RATING | 4 HOURS FIRE RATING

TIMBER DOORS | STEEL DOORS

Code	Description	Finish	Barcode
4100.20.400.2	Back to Back Pull Handles 19x400mm	SS	5 050640 028617

All pull handles are 19mmØ and are supplied with fixings to suit doors 44mm thick.

ESCUTCHEONS



4010.8.SS

5 YEAR GUARANTEE | 2 HOURS FIRE RATING TIMBER DOORS | 4 HOURS FIRE RATING STEEL DOORS

Code	Description	Finish	Barcode
4010.8.SS	Escutcheons – Lever Key	SS	5 050640 028556



4020.8.SS

5 YEAR GUARANTEE | 2 HOURS FIRE RATING TIMBER DOORS | 4 HOURS FIRE RATING STEEL DOORS

Code	Description	Finish	Barcode
4020.8.SS	Escutcheons – Euro Profile	SS	5 050640 022615



4030.8.SS

5 YEAR GUARANTEE | 2 HOURS FIRE RATING TIMBER DOORS | 4 HOURS FIRE RATING STEEL DOORS

Code	Description	Finish	Barcode
4030.8.SS	Bathroom Turn & Indicator Set	SS	5 050640 022622



4040.8.SS

5 YEAR GUARANTEE | 2 HOURS FIRE RATING TIMBER DOORS | 4 HOURS FIRE RATING STEEL DOORS

Code	Description	Finish	Barcode
4040.8.SS	Escutcheons - Blank	SS	5 050640 028563



4050.8.SS

5 YEAR GUARANTEE | 2 HOURS FIRE RATING TIMBER DOORS | 4 HOURS FIRE RATING STEEL DOORS

Code	Description	Finish	Barcode
4050.8.SS	Escutcheons – Oval Profile	SS	5 050640 028570

DOOR STOPS

- Floor mounted
- Available in satin anodised aluminium and polished brass



P68766

CE

Code	Description	Finish	Barcode
P68766	Door Stop - 76mm - Floor Mounted	PB	5 010564 043141
P68766	Door Stop - 76mm - Floor Mounted	SA	5 010564 043158

HINGES

- Range of hinges to suit most external and internal door applications both residential and commercial



P61029BB

CE certifire CF336

Code	Description	Finish	Barcode
P61029BB	Hinge - 102mm - EN1935 Class 11 - Ball Bearing -1 ½ Pairs	SS	5 010564 036075
P6769SSW	Hinge - 76mm Stainless Steel Washered - Polished Brass - 1 Pair	PB	5 010564 036167
P6769SSW	Hinge - 76mm Stainless Steel Washered - Self Colour Brass - 1 Pair	SC	5 010564 036174

NORMBAU COLOURED NYLON SERIES

A comprehensive range of colour co-ordinated architectural hardware offering durable, long lasting door furniture and accessories.

Lever handles are available in a wide choice of styles and sizes; either complete with roses and backplates or supplied separately for versatility. Levers can be supplied as either solid nylon or steel cored for extra strength. The range below is a small representation of our most popular trade products. For full details of our complete range visit www.security.ingersollrand.co.uk or call our customer care centre on 01922 707400

TOP TIP

For maximum strength and durability the lever handles shown below feature a cup point-socket grub screw which positively engages with the threaded spindle. This through spindle fixing ensures lever sets are strongly connected to one another and will not come loose. Other mounting variations include Ball Bearing operation, Fixed Roses and Backplates are available on request

NORMBAU DOOR FURNITURE







Code	Description	Finish
0246 08	Lever - 20mm Solid Nylon to Suit 35 - 45mm Doors	Colour*
0247 10	Rose - 52mm Dia	Colour*
0247 39	Spring Inner - To Suit 52mm Dia Rose 02470 10 (if spring retain required)	Colour*
0349 01	Backplate - 100 x 48mm Latch	Colour*
0348 04	Backplate - 155 x 48mm Bathroom - 57mm Centres	Colour*
0247 31	Escutcheon - Lever Key - 52mm Dia - c/w Wood Screw Fixings	Colour*
0247 32	Escutcheon - Euro Profile - 52mm Dia - c/w Wood Screw Fixings	Colour*
0358 34	Escutcheon - Indicator And Thumbturn - 52mm Dia - c/w Wood Screw Fixings	Colour*
0363 01	Pull Handle - 34 x 220mm Centres Thread Side	Colour*
0363 11	Pull Handle - 34 x 220mm Centres Pin Side	Colour*
0444 01	Pull Handle - 34 x 300mm Centres Thread Side	Colour*
0444 06	Pull Handle - 34 x 300mm Centres Pin Side	Colour*
0309 17	Pull Handle - 23 x 160mm Centres Back Fixing	Colour*
0583 10	Coat Hook (supplied without screws)	Colour*
0584 01	Hat & Coat Hook (supplied without screws)	Colour*
0510 01	Male Symbol height 130mm	Colour*
0510 02	Female Symbol height 130mm	Colour*
0510 04	Disabled Symbol height 130mm	Colour*

*for details of colours available in the Normbau range see page 83. Simply add the two digit number following the colour descriptions to the end of the product codes shown above

Access Control



Control of access is vital if the security of buildings is not to be compromised. Traditionally, master keyed systems have been the simple, cost effective way of managing controlled access to facilities where there are a variety of users with different areas of responsibility and different security priorities.

Whilst mechanical security still has an important part to play in the security of commercial buildings there is an increasing swing towards electronic access control. The complexity of such systems can encompass simple push button locks up to advanced biometric recognition to determine authorisation.

Ingersoll Rand
Security Technologies

Access Control

Briton

For many situations the use of a cylinder lock may not be the ideal solution to the security requirements of a specific door. The reasons can be many and varied. A door which is required to be kept locked whilst allowing 'keyholders' access can be inconvenient if the door is in constant use or if the number of users is very high. Similarly, a high turnover of users can become a nuisance if keys are not returned and the cylinder has constantly to be replaced to maintain security.

At the other end of the scale a high degree of control may be required allowing the building or facility owner to more closely control or monitor who accesses the door. Such increased control could include determining not only who has access, but at what times and for how long. In such circumstances electromechanical or electronic access control systems provide a more appropriate solution.

There are many levels of access control from mechanical digital locks and simple off-line battery powered electronic locks, through wireless electronic locks using proximity card technology to full on-line integrated access control systems. Our solutions can be operated using a number of credential options, including pin, card, smart card, proximity, i-button and biometrics – allowing you to select the system most appropriate to your building and its users.

Ingersoll Rand Security Technologies are able to offer access control products at all levels, however here we have concentrated on the most common trade product.

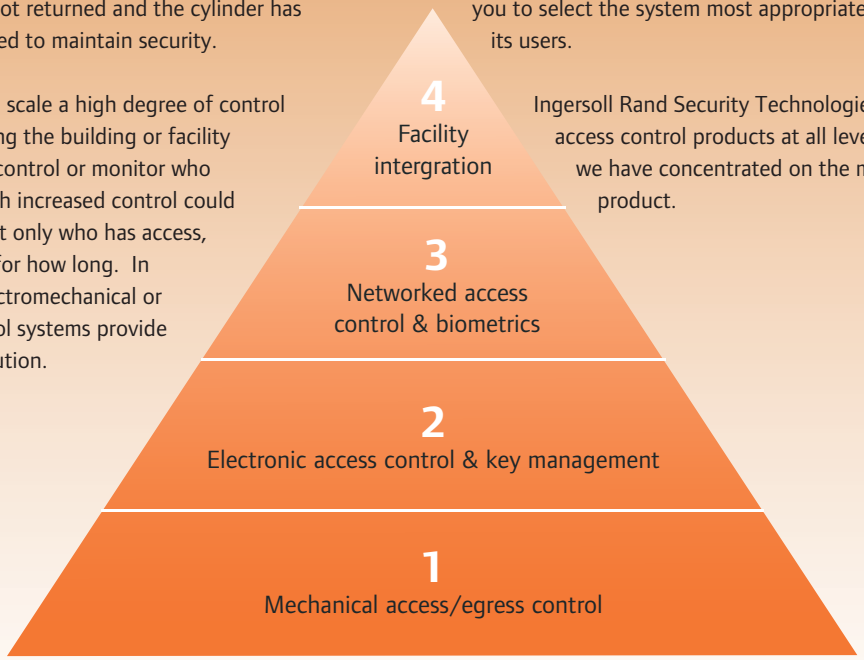

Programming Functions Explained

The following terminology is used to describe the different programming functions available with our access control products.

- **Supervised use**: where 2 codes/credentials are required to gain access
- **One-time user**: where a code is set up for a single use after which it becomes invalid – ideal for deliveries or workmen
- **Freeze/Lock-out**: permanently locks the keypad until the lock-out code is re-entered or pass through code is entered
- **Toggle mode**: unlocks the lock indefinitely to provide free passage, entering the code again will reset the lock
- **Pass through mode**: allows access during lock-out mode
- **Normal use**: unlocks the lock for a user programmable time period and then relocks

BRITON COBRA RANGE

COMMON FEATURES OF THE RANGE

The Cobra range of battery powered electronic locksets is ideal for new construction or retrofit applications where aesthetics are important and programming flexibility at the lock is critical. This makes them ideal for schools, hospitals, multi-occupancy buildings, retail stores and commercial and government facilities.

The range includes King Cobra, King Cobra Narrow Stile, King Cobra Euro Profile and standard Cobra units.

The following features are common to the range:

- Multiple user codes
- All functional programming codes explained on Page 70
- Programming is simple and is carried out at the door, without the need for software or a special programming device
- Red and green LED indicators for system activation, status, errors and low power
- IP54
- Optional cover plates are available to cover previous fixings making it ideal for replacement applications
- Key override facility
- Battery powered, so no electrical cabling required
- Vandalgard™ clutching lever minimises the risk of damage from vandalism
- Cylinders are available keyed alike or masterkeyed to special order.

Finishes

Available in Satin Chrome as standard. Other finishes available on request are Polished Brass, Satin Bronze, Oil Rubbed Bronze and Polished Chrome. A square style lever handle is also available to special order.

TOP TIP

We strongly recommend changing the programming code immediately on installation in order to override the default factory setting.

IP Rating - What is it?

IP rating stands quite literally for 'Ingress Protection'
An IP (Ingress Protection) number is used to specify the environmental protection of enclosures around electronic equipment. These ratings are determined by specific tests. The IP (Ingress Protection) number is composed of two numbers the first referring to the protection against solid objects and the second against liquids. The higher the number the better the protection.

IP 5 4

Protection against Solid Objects

0 No protection (sometimes **X**)
1 Protected against solid objects up to 50mm^2
2 Protected against solid objects up to 12mm^2
3 Protected against solid objects up to 2.5mm^2
4 Protected against solid objects up to 1mm^2
5 Protected against dust, limited ingress (no harmful deposit)
6 Totally protected against dust

Protection against Liquids

0 No protection (sometimes **X**)
1 Protected against vertically falling drops of water (e.g condensation)
2 Protection against dripping water up to 15 degrees from vertical
3 Protection against direct sprays of water up to 60 degrees from vertical
4 Protection against splashed water from all directions – limited ingress permitted.
5 Protected against low pressure jets of water from all directions – limited ingress permitted.
6 Protected against low pressure jets of water – limited ingress permitted (e.g. ship deck)
7 Protected against the effect of immersion between 15cm and 1m.
8 Protected against long periods of immersion under pressure.

BRITON KING COBRA

- Incorporates all the features common to the Briton Cobra range
- Integrated 12 button stainless steel keypad
- iButton credential reader
- 120 code capacity
- Battery powered (4 x AA batteries provide up to 80,000 cycles)
- To suit doors from 38 – 51mm thick
- Site reversible for left or right hand doors
- Available with a choice of Round or Euro profile cylinder



9240.17.RSD

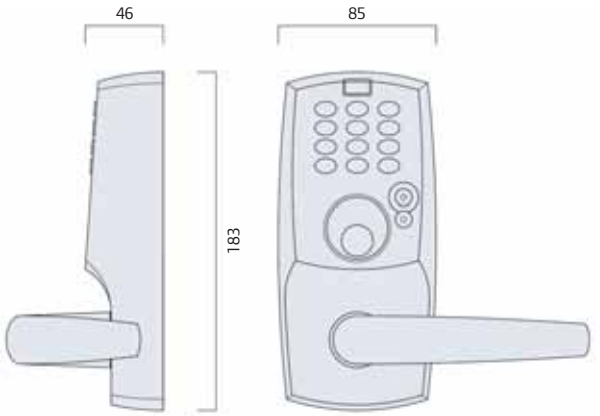

1 YEAR GUARANTEE

Code	Description	Size	Finish	Barcode
9240.17.RSD	King Cobra Digital Lock	13mm latch bolt, 60mm backset, 17 style lever	SC	5 050640 018748 >
9240.06.RSD	King Cobra Digital Lock	13mm latch bolt, 60mm backset, 06 style lever	SC	-
9250.17.RSD	King Cobra Digital Lock	13mm latch bolt, 70mm backset, 17 style lever	SC	5 050640 018731 >
9250.06.RSD	King Cobra Digital Lock	13mm latch bolt, 70mm backset, 06 style lever	SC	5 050640 020857 >
9260.17.RSD	King Cobra Digital Lock	19mm latch bolt, 70mm backset, 17 style lever	SC	5 050640 018878 >
9260.06.RSD	King Cobra Digital Lock	19mm latch bolt, 70mm backset, 06 style lever	SC	5 050640 018854 >
9240.06.EUR	King Cobra Euro Profile Digital Lock	13mm latch bolt, 60mm backset, 17 style lever	SC	-
9240.17.EUR	King Cobra Euro Profile Digital Lock	13mm latch bolt, 60mm backset, 06 style lever	SC	-
9250.06.EUR	King Cobra Euro Profile Digital Lock	13mm latch bolt, 70mm backset, 17 style lever	SC	-
9250.17.EUR	King Cobra Euro Profile Digital Lock	13mm latch bolt, 70mm backset, 06 style lever	SC	-

BRITON KING COBRA NARROW STILE

- A narrow stile version of the Briton King Cobra designed specifically to suit doors with narrow stiles, particularly aluminium framed doors
- Compatible with deadlatches and deadbolts suitable for 44mm thick aluminium doors with narrow stiles
- Incorporates all the features common to the Briton Cobra range
- Integrated 12 button stainless steel keypad
- iButton credential reader
- 120 code capacity
- Battery powered (4 x AAA batteries provide up to 40,000 cycles)
- Site reversible for left or right hand doors



9230.RSD

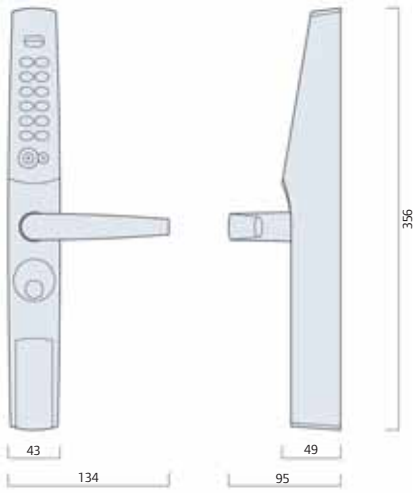

Product Selector



Lock or latch type	deadlatch	deadlatch	deadlatch	deadbolt	deadbolt	short throw deadbolt
13mm	9230.RSD.xx	9232.RSD.xx	9231.RSD.xx	9232.RSD.xx	9232.RSD.xx	9233.RSD.xx
25mm	lever	knob	turnpiece	knob	knob	knob
Finishes	SC / OB	SC / OB	SC / OB	SC / OB	SC / OB	SC / OB
Compatible with Adams Rite ref*	4710, 4730, MS1950	4710, 4730, MS1950	4710, 4730, MS1950	MS1850S	MS1850-050 MS1950-050	4070

*Some Adams Rite locks shown are 'country specific' and may not be available worldwide. Check with your Adams Rite supplier for locks available to your market.

1 YEAR GUARANTEE

Code	Description	Finish	Barcode
9230.RSD	Narrow Stile Digital Lock c/w Lever for use with deadlatches	SC	5 050640 018687
9231.RSD	Narrow Stile Digital Lock c/w knob for use with deadlatches	SC	5 050640 018694
9232.RSD	Narrow Stile Digital Lock c/w knob for use with deadlatches/Deadbolt	SC	5 050640 018700
9233.RSD	Narrow Stile Digital Lock c/w Turnpiece for use with deadlatches	SC	5 050640 018717

BRITON COBRA

- 100 code capacity
- To suit doors from 38 – 51mm thick
- Battery powered (4 x AA batteries provide up to 80000 cycles)
- Site reversible for left or right hand doors



9210.06

1 YEAR GUARANTEE

TOP TIP

The backset of a standard tubular latch is 70mm and suits a minimum door stile width of 115mm and a maximum frame stop depth of 19mm. Where the frame door stop depth is greater than 12mm the 60mm backset version should NOT be used.

Code	Description	Finish
9210.17	Digital Lock 60mm backset 17 style lever door thickness 38-51mm	SC
9210.06	Digital Lock 60mm backset 06 style lever door thickness 38-51mm	SC
9220.17	Digital Lock 70mm backset 17 style lever door thickness 38-51mm	SC
9220.06	Digital Lock 70mm backset 06 style lever door thickness 38-51mm	SC

Important Note: It is strongly recommended to change the programming code immediately on installation to delete the factory settings.

BRITON PUSH BUTTON MECHANICAL LOCK

- Ideally suited to areas which require restricted but convenient access, such as offices, workshops and storerooms.
- Single PIN code
- Suitable for light duty and internal use only
- Spindle can be cut on site to suit doors between 35mm and 60mm thick



9150

1 YEAR GUARANTEE

Code	Description	Finish	Barcode
9150.SV	Push Button Mechanical Digital Lock	SV	5 050640 004697 >
9150.PB	Push Button Mechanical Digital Lock	PB	5 050640 004680 >
9155.SV	Push Button Mechanical Digital Lock c/w Hold Open	SV	5 050640 004710 >
9155.PB	Push Button Mechanical Digital Lock c/w Hold Open	PB	5 050640 004703 >

These products are also available in pre-pack. Simply add a P prefix to the part number shown when ordering.

ICS INTERACTIVE CONTROL SYSTEM

- An integrated access control system, capable of stand alone or networked solutions
- Can be upgraded from a stand alone application to a fully networked multi door system without hardware redundancy
- Suitable for up to 32 networked doors
- Suitable for up to 2000 users
- Available with the following reader options:
  - Card Only
  - Pin Only
  - Card and Pin Proximity
- Suitable for internal and external applications
- Can be programmed at the door, or at the controller or by PC software
- Simple system management



Code	Description	Finish
ICCL161	ICS System Codelock – up to 98 User codes available	SS
ICCR201	ICS System Cardlock – Up to 198 Users Available	SS

Note: Proximity is available only as an option when used with advanced RC426 or RC436.

BRITON ACCESSORIES



AC1312



ACCBS1



ACMBS1



ACDIS

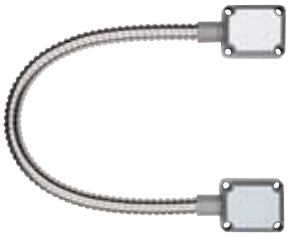

ACDL9

Code	Description	Finish
AC1312	Exit Push button Surface Mounted, white plastic finish	white
ACCBS1	Exit Push Button Flush Mounted, Stainless Steel, Green Plastic Domed Button	SS
ACMBS1	Exit Push Button Flush Mounted, Stainless Steel – Vandal Resistant	SS
ACDIS	Exit Push Button Semi Flush Mounted, Stainless Steel Finish – Disabled Sign	SS
ACDL9	Door Loop Surface Mounted	SS
PSTL2	Power Supply 12VDC 1 Amp	-

BRITON 9500 SERIES ELECTROMAGNETIC LOCKS

- High quality range of 'face to face' locking devices offering up to 545kg holding force
- Suitable for outward opening doors as standard (can be converted for use on inward opening doors by using Z and L brackets available on request Tel: 0191 430 2500)
- Adjustable mounting bracket facilitates installation
- All units are 'fail unlocked' providing safe exit in the event of power failure if interfaced to fire alarm outputs
- Steel armature is either fixed through, or to, the door
- Mini-mag models with small footprints available for lower security applications
- Mortice models available for use with custom housings, suitable for single and double doors
- Monitored versions allow the door status to be monitored remotely to show whether it is open or closed





9551



9552



9501



9502

3 YEAR GUARANTEE

Code	Description	
9551	Single Mini Magnet - Holding Force 272kg	5 050640 021021 >
9551.M	Single Mini Magnet - Holding Force 272kg Monitored	5 050640 021038 >
9552	Double Mini Magnet - holding Force 272kg	5 050640 021045 >
9552.M	Double Mini Magnet - Holding Force 272kg Monitored	5 050640 021052 >
9501	Single Magnet - Holding Force 544kg	5 050640 020987 >
9501.M	Single Magnet - Holding Force 544kg Monitored	5 050640 020994 >
9502	Double Magnet - Holding Force 544kg	5 050640 021007 >
9502.M	Double Magnet - Holding Force 544kg Monitored	5 050640 021014 >
9560	Mortice Mounted Magnet - Holding force 272kg	5 050640 021069 >
9560.M	Mortice Mounted Magnet Monitored - Holding Force 272kg	5 050640 021076 >

Point of Sale

To help our retailers in displaying and selling out our products we have developed a range of merchandising units designed to provide flexible display options for in store.

Research has shown that by displaying ironmongery products better in store and providing selection tools to assist purchases with their product choice sales of these products are significantly increased.

Currently of all the fire doors sold out of UK builder's merchants less than 20% include the corresponding sales of fire door ironmongery. However by placing an ironmongery merchandising unit adjacent to the fire doors this figure can be significantly increased.

In this section we highlight some of the units we currently have available as well as details of other point of sale and selection tools to help you in maximising your ironmongery sales.



Ingersoll Rand
Security Technologies

MERCHANDISING UNITS

The following standard display units are supplied free of charge when ordered with the corresponding stock to fill the stand. We have a number of planogram options to allow you to stock the merchandisers with those products that are most relevant to your customers.

In order to qualify for a free of charge stand we will require you to agree to maintain the approved stock levels for a minimum period. For more details on the planogram options available please speak to your Key Account Manager.



WALL STANDING DISPLAY UNITS

- Available as 2ft and 4ft units these can be fixed together to produce runs to suit the length of your available wall space
- Available with a choice of illuminated, branded headers to provide presence in store
- Available as peg board only, with additional slot on shelves or with specially designed exit device holders to provide flexibility when displaying both pre-packed and boxed products.

To place an order for these units please contact your Key Account Manager or call our marketing department on 01922 707400 for more information.

FREE STANDING DISPLAY UNITS

- Designed to provide flexible display space in store
- Ideal for gondola ends or sighting next to fire doors or trade counters
- Low height ensures that good visibility throughout store is maintained
- Supplied complete with Selection Guides for Briton Door Closers and Exit devices to help customers to choose the product they need to for their particular application
- Designed to display a core range of Briton door closers, exit devices and commercial locks suitable for use on fire doors
- Incorporate literature holders for displaying Briton literature

To place an order for these units please contact your Key Account Manager or call our marketing department on 01922 707400 for more information.



COUNTER TOP DISPLAY UNITS

- Designed to provide product visibility at that all important point of purchase and encourage that impulse purchase
- Eye catching display to show product application
- Holds 6 padlocks and 6 hasp and staples

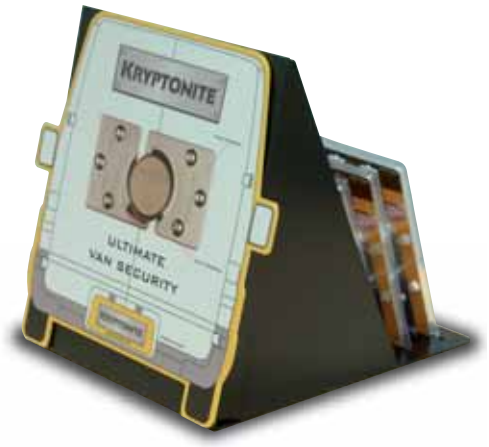

DISPLAY BOARDS AND LOCK BLOCKS

- For instances where it is not possible to have stock on display we are able to provide product display boards and lock blocks.

Please contact your Key Account Manager to discuss your requirements in more detail.





BESPOKE DISPLAY UNITS

If your display requirements do not suit our standard display units we are willing to work with you in developing bespoke units to meet your exact requirements.

Please contact your Key Account Manager to discuss your requirements in more detail.

SELECTORS AND POSTERS

KRYPTONITE VAN LOCK POSTER

- A wall mounted version of our popular Kryptonite van lock counter top unit
- Manufactured from hard wearing foamex this is designed to be fixed to counter fronts or walls to promote the van locks at the point of purchase



PRODUCT SELECTORS

- Designed to help customers in selecting the right product for their particular application depending on the type of door, its location and its usage
- Providing guidelines on CE marking and the latest European standards they help to ensure their product choice meets with the latest building regulations





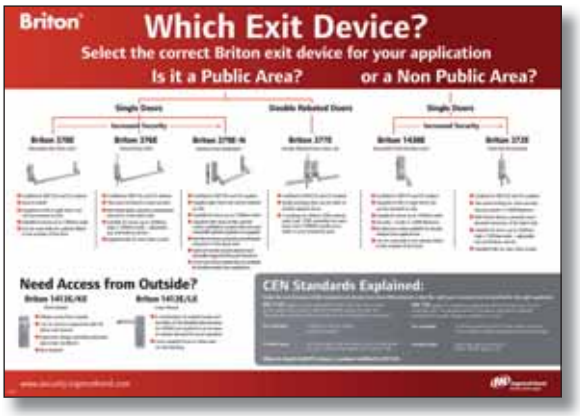

ADDITIONAL POINT OF SALE

We are continually developing our point of sale to help you in maximising your ironmongery sales in store. Other POS items include window decals, peg hanging displays and bus stops. For details of our latest displays please contact our marketing department on **01922 707400** or email **lisa_jones@eu.irco.com**

Glossary of Terms

Anti-drill plate
Steelplate with sufficient hardness to resist penetration by a HSS drill bit

Anti-thrust Action
Latch action in which the latch bolt, when fully thrown, resists being forced back by end pressure

Anti-thrust Bolt
Spring actuated bolt which cannot be pushed back once it has been fully thrown into a correctly positioned locking plate

ASTM
An International voluntary standards development organisation

Backcheck
A 'cushioning' effect to prevent damage to door and adjoining structure if door is thrown or blown open

Backplate
Separate component on back of product providing the fixing means

Backset
Distance from the outer face of the forend (or faceplate if fitted) to the centre-line of the keyhole and/or follower

Bathroom Lock
Privacy lock with latch bolt operated by lever handle or knob form both sides, and an additional deadbolt operated by thumb slide, thumb turn etc, from inside only

BKP
Special patented device which prevents the cylinder from being bumped

Bolt
Moving part of a lock or latch that provides engagement between leaf and frame

Bolt Through Fixing
Method of attachment whereby the fixing means pass right through the door

Bumping
Where cylinders are bumped and leaves no sign of forcible entry

CE
The CE marking is a mandatory European marking for certain product groups to indicate conformity with the essential health and safety requirements set out in European Directives

Certifire
Is an independent third party product certification at a higher level, a quality mark, designed to enable manufacturers to demonstrate a difference between their products and those satisfying only the minimum requirement

Classroom Function
The classroom function in a thumb-turn cylinder makes it possible to rotate the thumb-turn in one direction only. This is usually used to ensure that someone inside a room cannot lock anybody out but can always escape in an emergency. The cylinder is also clutch release so somebody in the room cannot prevent a key holder from entering

Closing Speed
Speed at which a door leaf is allowed to close when under hydraulic control

DDA
Disability Discrimination Act

Deadbolt
Bolt that can be deadlocked

Delayed Action
Inbuilt function of any door closing device that allows the closing moment to be adjusted

Differs
Refers to the key arrangement of a lock, with the higher the number of differs providing the greater key security

Dogging
A device found on exit hardware. If an exit door permits unrestricted traffic flow, a dogging device is a means of holding back the latch bolts when required

Door closer Power Size
Usually determined by size and weight of door

Drill Resistance
Cylinders that have one or more steel components in the cylinder which are designed to resist or delay attacks from a drill

EN
European Normative standards Agency

Electromagnetic Hold Open
A closer with an integral electro magnet allows a fire door to be held open for convenience. The magnet is linked into the fire alarm system and automatically releases the door when the fire alarm is activated

Electromagnetic Swing Free
As electromagnetic hold open, but permits a fire door to be 'free swinging' for convenience. Not recommended for general traffic

Escutcheon
Component which surrounds the entrance to a keyhole at the surface of the leaf, for decorative purposes

Euro profile Cylinder/DIN Cylinder
Profile cylinder for which the cross-section of the housing is to the standard European profile

Exit Device
Device that provides an emergency or panic exit function of an escape route

Handed
Restricted to one particular closing or opening

iButton
Increases security as more than just a code is required to gain access

IP rating
This is the degree to which an item is protected from the environment

Keyed Alike
Operable with the same key

Latch Action
Self-engaging fastener which secures the leaf of a door in the closed position, and which can be released by hand

Master Keyed
Key that operates locks of all combinations in a suite

Nightlatch
Lock with automatic bolt which is withdrawn from outside by key, and from inside by handle or knob

Non-Handed
Not restricted to one particular closing or opening direction only

Outside Access Device (OAD)
Mechanism for opening exit device from outside

Panic Latch
Latch which is release by pressure anywhere along a horizontal bar running the width of the door

Pick Resistance
Special configuration of hardened pins and drivers within a cylinder to resist attack by specialist picking tools

Push Resistant
A cam that protrudes from the cylinder body to anchor them firmly to the lock prevents it from begin dislodged by a hammer blow

Part M
Building regulations Part M 2004 Access to and Use of Buildings

Pullman Latch
Panic Exit latch with curved bearing surfaces to facilitate engagement and release under side load

Push Bar
Horizontal bar of a panic exit device which is used to activate the mechanism

Push pad
One of the accepted operating elements of an emergency exit device

Rim Cylinder
Cylinder for use with a rim lock or latch, which is adapted for flush mounting with a leaf

Rim Deadlock/Latch/Rim Lock/Night latch
Adapted for surface mounting on the face of a leaf

Snap Resistant
Patented laminated steel core that provides snap resistance to both flexural and pulling test

Sprung
Hardware containing a spring mechanism which enables the door handle to return to the horizontal position after use

Template Adjustable
Door closer strength determined by fixing position

Thumb Turn
Small handle or knob for operating by thumb and forefinger

Track Arm
A single arm which avoids the need for projecting arm

Tri-packed
Offer various fixing positions ie Fig 1, Fig 66 etc

Vandalgard
Clutching mechanism

Windthrough Adjustable
Door closer strength determined by physical windthrough adjustment of the closer spring

Ingersoll Rand
Security Technologies

Product Finishes

Briton

The hardware products detailed within this catalogue are available in a wide selection of finishes including:

- Solid metallic finishes
- Electroplated metallic finishes
- Powder coated metallic finishes
- Powder coated coloured finishes

The powder coated colours are specially formulated to provide a close match to the coloured nylon finishes of our Normbau range of door hardware.

Please note: All door controls, whether projecting, parallel or track arm variants, are supplied with arms, brackets and/or tracks finished to match the body cover unless indicated otherwise

Due to the limitations of the printing process it is advisable to check your choice of finish against actual product.

Solid metallic finishes



satin stainless steel
(SS)



polished stainless steel
(PS)



polished aluminium
(ESA)



polished brass
(PB)



satin brass
(SB)

Powder coated finishes



silver
(SE)



gold
(GE)



brown
(BE)



matt black
(MB)

Powder coated coloured finishes to match Normbau nylon colours



white 19
NWH
RAL-DS 000 95 00
RAL 9016
NCS S 0500-N



manhattan 67
NMG
RAL-DS 080 70 05
-
NCS S 2502-Y



dark grey 18
NDG
RAL-DS 000 35 00
RAL 7043
NCS S 7500-N



black 16
NBL
RAL-DS 000 15 00
RAL 9005
NCS S 900-N



slate blue 63
NSB
RAL-DS 240 50 15
-
NCS S 4020-B



dark blue 37
NDB
RAL-DS 270 20 25
RAL 5003
NCS S 7020-R80B



blue 11
NBU
RAL-DS 270 30 40
-
NCS S 3560-R80B



yellow 22
NYE
RAL-DS 080 80 90
-
NCS S 1080-Y10R



green 13
NGR
RAL-DS 160 30 38
-
NCS S 5540-G



red 12
NRE
RAL-DS 030 30 45
RAL 3003
NCS S 2570-R

Code	Description	Page
0246 08	Normbau Lever - 20mm Solid Nylon to Suit 35-45mm Doors	68
0247 10	Normbau Rose - 52mm Dia	68
0247 31	Normbau Escutcheon - Lever Key - 52mm Dia - c/w Wood Screw Fixings	68
0247 32	Normbau Escutcheon - Euro Profile - 52mm Dia - c/w Wood Screw Fixings	68
0247 39	Normbau Spring Inner - To Suit 52mm Dia Rose 02470 10 (if spring return required)	68
0283 10	Normbau Coat Hook	68
0309 17	Normbau Pull Handle - 34x 300mm Centres Pin Side	68
0348 04	Normbau Backplate - 155 x 48mm Bathroom - 57mm Centres	68
0349 01	Normbau Backplate - 100 x 48mm Latch	68
0358 34	Normbau Escutcheon - Indicator And Thumbturn - 52mm Dia - c/w Wood Screw Fixings	68
0363 01	Normbau Pull Handle - 34x 220mm Centres Thread Side	68
0363 11	Normbau Pull Handle - 34x 220mm Centres Pin Side	68
0444 01	Normbau Pull Handle - 34x 300mm Centres Thread Side	68
0444 06	Normbau Pull Handle - 23 x 160mm Centres Back Fixing	68
0510 01	Normbau Male Symbol	68
0510 02	Normbau Female Symbol	68
0510 045	Normbau Disabled Symbol	68
0584 01	Normbau Hat & Coat Hook	68
101/EB	Legge Concealed Jamb Closer	5
1110	Door Closer Template Size 2-4 Trimplate c/w Screw Thread Arm	6
1110.C	Door Closer Template Size 2-4 Classic Cover c/w Flatform Arm	6
1110.T	Door closer Fixes Strength Track Size 3 Trimplate	7
1110.T.C	Door closer Fixes Strength Track Size 3 Classic Cover	7
1120B	Door Closer Adj Size 2-4 Trimplate c/w B/C & Screw Thread Arm	6
1120B.C	Door Closer Adj Size 2-4 Classic Cover c/w B/C & Flatform Arm	6
1130B	Door Closer Adj Size 2-6 Trimplate c/w B/C & Screw Thread Arm	7
1130B.C	Door Closer Adj Size 2-6 Classic Cover c/w B/C & Flatform Arm	7
121CE.	Door Closer Fixed Size 3 For Fire Doors	5
1413E/KE	Outside Access Device - Knob Operated c/w Euro-Profile Cylinder	18
1413E/LE	Outside Access Device - Lever Operated c/w Euro-Profile Cylinder	18
1438.R	Push Pad - Rim Latch R/H, site reversible to L/H	17
2003.T	Door closer Fixed Size 3 c/w Single Arm Non-Projecting	8
2003V	Door Closer Adj Size 1-4 c/w B/C	8
2003	Door Closer Fixed Size 3	8
2004	Door Closer Fixed Size 4	8
2110.L.	Door Closer Template 2-4 c/w L Cover	9
2120B.L	Door Closer Adj Size 1-4 c/w B/C & L Cover	9
2130B.C	Door Closer Adj Size 2-6 c/w B/C & C Cover	10
2130B.L.	Door Closer Adj Size 2-6 c/w B/C & L Cover	10
2130B.T.C	Door Closer Adj size 2-4 Track Fig 30 c/w b/c/ & C Cover	10
2130B.T.L	Door Closer Adj Size 2-4 Track Fig 30 c/w b/c & L Cover	10
2130B.TE.C	Door Closer Adj Size 3-4 Electromagnetic HO Arm c/w B/C & C Cover	11
2130B.TE.L	Door Closer Adj Size 3-4 Electromagnetic HO Arm c/w B/C & L Cover	11
2130BD.C	Door Closer Adj Size 2-6 c/w B/C, delayed action & C Cover	10
2130BD.L	Door Closer Adj Size 2-6 c/w B/C, D/A & L Cover	10
372	Push Pad - Vertical Bolt	18
376	Push Bar - Vertical Panic Bolt	15
376.A	Push Bar - Vertical panic bolt c/w Alarm Switch (warning sign not included)	15
376.D	Push Bar - Vertical Panic Bolt c/w Manual Dogging	15
377.L	Push Bar - Double Rebated Door Panic Set L/H comprises of 376, 378.L & 38DDS	16
377.R	Push Bar - Double Rebated Door Panic Set R/H comprises of 376, 378.L & 38DDS	16
378DDS	Double Door Strike	16
378.R	Push Bar - Rim Latch R/H, Site Reversible to L/H	15
378.D.L	Push Bar - Rim Panic Latch L/H c/w Manual Dogging, Site Reversible to R/H	15
378.D.R	Push Bar - Rim Panic Latch L/H c/w Manual Dogging, Site Reversible to L/H	15
379.N	Mortice Panic Exit Section	17
4010.8	Escutcheons – Lever Key	66
4020.8	Escutcheons – Euro Profile	66
4030.8	Bathroom Turn & Indicator Set	66
4040.8	Escutcheons - Blank	66
4050.8	Escutcheons – Oval Profile	66
4100.20.300.1	Bolt through Pull Handle 19x300mm	65
4100.20.300.2	Back to Back Pull Handles 19x300mm	65
4100.20.400.1	Bolt through Pull Handle 19x400mm	65
4100.20.400.2	Back to Back Pull Handles 19x400mm	65
4140.R.	Lever on Rose - return to door	63
4240.R.	Lever on Rose - Straight Mitred	63
4340.R.	Lever on Rose – Straight	64
4440.R.	Lever on Rose – Curved Mitred	64
4540.R.	Lever on Rose - Coupe	64
5000.001	Heavy Duty Box Strikes - Latch & Bolt	44
5000.002	Heavy Duty Box Strikes - Latch only	44
5000.015	Strike Plate - Round	44
5000.016	Strike Plate - Square	44
5000.017	Strike Plate - Round RH	44
5000.018	Strike Plate - Square RH	44
5000.019	Strike Plate - Round LH	44
5000.020	Strike Plate - Square LH	44
5000.021	Heavy Duty Box Strikes - Bolt only	44
503	Contract Wall Magnet - Surface Mounted	11
5210.57.R	Deadlock - Dual Profile 57mm Backset round Forend	45
5210.57.S	Deadlock - Dual Profile 57mm Backset Square Forend	45
5220.57.R	Sashlock - Dual Profile 57mm Backset 57mm Centres Round Forend	46
5220.57.S	Sashlock - Dual Profile 57mm Backset 57mm Centres Square Forend	46
5230.57.R	Bathroom Lock - 57mm Backset 5mm Spindle 57mm Centres Round Forend	46
5230.57.S	Bathroom Lock - 57mm Backset 5mm Spindle 57mm Centres Square Forend	46
5240.57.R	Latch- 57mm Backset round Forend	47
5240.57.S	Latch- 57mm Backset Square Forend	47
5250.57.S	Nightlatch - dual Profile 76mm Case Square Forend	47
533FMB	Floor Mounting Bracket Suitable for 503 Magnets	11
5410.60.R	Deadlock - Euro Profile 60mm Backset Radius Forend	42
5410.60.S	Deadlock - Euro Profile 60mm Backset Square Forend	42
5420.60.R	Sashlock Euro Profile 60mm Backset 72mm Centres Radius Forend	43
5420.60.S	Sashlock Euro Profile 60mm Backset 72mm Centres Square Forend	43
5430.60.R	Bathroom Lock - 60mm Backset 8mm Spindle 78mm Centres Radius Forend	43
5430.60.S	Bathroom Lock - 60mm Backset 8mm Spindle 78mm Centres Square Forend	43
5440.60.R	Latch - 60mm Backset Radius Forend	44
5440.60.S	Latch - 60mm Backset Square Forend	44
5510.60.R	72mm Deadlock - Euro Profile	38
5510.60.S	72mm Deadlock - Euro Profile	38
5520.60.R	72mm Sashlock - Euro Profile	39
5520.60.S	72mm Sashlock - Euro Profile	39
5530.60.R	72mm Bathroom Lock - Euro Profile	39
5530.60.S	72mm Bathroom Lock - Euro Profile	39
5540.60.R	72mm Latch Dual Profile	40
5540.60.S	72mm Latch Dual Profile	40
5550.60.R	72mm Nightlatch - Dual Profile	40
5550.60.S	72mm Nightlatch - Dual Profile	40
5560.60.R	72mm Escape Latch - Dual Profile	41
5560.60.S	72mm Escape Latch - Dual Profile	41
720018330202	Stronghold Security Anchor Above Ground	57
720018330219	Stronghold Security Anchor In Ground	57
720018360216	Locking Hitch Pin	59
720018360223	Hitch Pin Security Cable	59
720018810209	Chain and Padlock	58
720018810230	Cinch Ring Security Chain	58
720018830139	Key Cable	59
720018830207	Resettable Combination Cable	59
720018830405	Flexible Steel Cable	58
720018830412	Flexible Steel Cable	58
720018830504	Flexible Steel Cable	58
720018850120	Marine Grade Padlock	56
720018850137	Marine Grade Padlock	56
720018850144	Marine Grade Padlock	56
720018850175	Stainless Steel Combination Padlocks	57
720018850267	Brass Padlock - 38mm	55
720018850281	4 x brass Padlocks k/a - 38mm	55
720018850298	Brass Padlock - 50mm	55
720018850359	Padlock 44.5mm Steel Laminated	55
720018850366	44.5mm Laminated Steel Padlock	55
720018850373	50mm Laminated Steel Padlock	55
720018851134	Solid steel Padlock	56
720018851219	Solid steel Padlock	56
720018851233	Solid steel Padlock	56

Code	Description	Page
720018855101	Security Hasps	60
720018855118	Security Hasps	60
720018855149	Security Hasps	60
720018855156	Shackle-less padlock	60
720018994848	Security Hasps	60
7510.ME45	CISA 7500 Euro Single Cylinder 45mm MK - Differ Keys Not included	51
7520.ME3535	CISA 7500 Euro Double Cylinder 70mm MK - Differ Keys Not included	51
7520.ME4555	CISA 7500 Euro Double Cylinder 100mm MK - Differ Keys Not included	51
7530.ME3535T	CISA 7500 Euro Cylinder & Turn 70mm MK - Differ Keys Not included	51
7530.ME4030T	CISA 7500 Euro Cylinder & Turn 70mm MK - Differ Keys Not included	51
9150	Push Button Mechanical Digital Lock	74
9155	Push Button Mechanical Digital Lock c/w Hold Open	74
9210.06	Digital Lock 60mm backset 06 style lever door thickness 38-51mm	74
9210.17	Digital Lock 60mm backset 17 style lever door thickness 38-51mm	74
9220.06	Digital Lock 70mm backset 06 style lever door thickness 38-51mm	74
9220.17	Digital Lock 70mm backset 17 style lever door thickness 38-51mm	74
9230.RSD	Narrow Stile Digital Lock c/w Lever for use with deadlatches	73
9231.RSD	Narrow Stile Digital Lock c/w knob for use with deadlatches	73
9232.RSD	Narrow Stile Digital Lock c/w knob for use with deadlatches/ Deadbolt	73
9233.RSD	Narrow Stile Digital Lock c/w Turnpiece for use with deadlatches	73
9240.06.EUR	King Cobra Euro Profile Digital Lock 13mm latch bolt, 60mm backset, 17 style lever	72
9240.06.RSD	King Cobra Euro Profile Digital Lock 13mm latch bolt, 60mm backset, 06 style lever	72
9240.17.EUR	King Cobra Euro Profile Digital Lock 13mm latch bolt, 60mm backset, 06 style lever	72
9240.17.RSD	King Cobra Euro Profile Digital Lock 13mm latch bolt, 60mm backset, 17 style lever	72
9250.06.EUR	King Cobra Euro Profile Digital Lock 13mm latch bolt, 70mm backset, 17 style lever	72
9250.06.RSD	King Cobra Euro Profile Digital Lock 13mm latch bolt, 70mm backset, 06 style lever	72
9250.17.EUR	King Cobra Euro Profile Digital Lock 13mm latch bolt, 70mm backset, 06 style lever	72
9250.17.RSD	King Cobra Euro Profile Digital Lock 13mm latch bolt, 70mm backset, 17 style lever	72
9260.06.RSD	King Cobra Euro Profile Digital Lock 19mm latch bolt, 70mm backset, 06 style lever	72
9260.17.RSD	King Cobra Euro Profile Digital Lock 19mm latch bolt, 70mm backset, 17 style lever	72
9501	Single Magnet – Holding Force 544kg	76
9502	Double Magnet – Holding Force 544kg	76
9501.M	Single Magnet – Holding Force 544kg Monitored	76
9502.M	Double Magnet – Holding Force 544kg Monitored	76
9551	Single Mini Magnet – Holding Force 272kg	76
9551.M	Single Mini Magnet – Holding Force 272kg Monitored	76
9552	Double Mini Magnet – holding Force 272kg	76
9552.M	Double Mini Magnet – Holding Force 272kg Monitored	76
9560	Mortice Mounted Magnet – Holding force 272kg	76
9560.M	Mortice Mounted Magnet Monitored – Holding Force 272kg	76
9963/01	Door Closer Fixed Size 3 Electromagnetic HO/free Swing Fig.1 & Fig. 61	12
9963/66	Door Closer Fixed Size 3 Electromagnetic HO/free Swing Fig 66	12
9964/01	Door Closer Fixed Size 4 Electromagnetic HO/free Swing Fig.1 & Fig. 61	12
9964/66	Door Closer Fixed Size 4 Electromagnetic HO/free Swing Fig. 66	12
9965/01	Door Closer Fixed Size 5 Electromagnetic HO/free Swing Fig.1 & Fig. 61	12
9965/66	Door Closer Fixed Size 5 Electromagnetic HO/free Swing Fig.1 & Fig. 62	12
AC1312	Exit Push button Surface Mounted, white plastic finish	75
ACCBS1	Exit Push Button Flush Mounted, Stainless Steel, Green Plastic Domed Button	75
ACDIS	Exit Push Button Semi Flush Mounted, Stainless Steel Finish – Disabled Sign	75
ACDL9	Door Loop Surface Mounted	75
ACMBS1	Exit Push Button Flush Mounted, Stainless Steel – Vandal Resistant	75
B08/0.5	Rebate Conversion Kit	28
B21/0.5	Rebate Conversion Kit	28
B2512/5	Bathroom Deadlatch - 76mm Case 5mm Follower	26
B41/0.5	Rebate Conversion Kit	28
B42/0.5	Rebate Conversion Kit	28
B59/0.5	Rebate Conversion Kit	28
E2566/0.5	Rebate Conversion Kit	28

Code	Description	Page
FSR/20B	Transformer rectifier (Relay not included)	12
FSR/4B	Transformer rectifier (Relay not included)	12
FSR/50B	Transformer rectifier (Relay not included)	12
ICCL 161	ICS System Codelock – up to 98 User codes available	75
ICCR201	ICS System Cardlock – Up to 198 Users Available	75
OA310.07	Astral Euro Double 30/30 (59mm overall) - 3 keyed	51
OA310.13	Astral Euro Double 35/35 (69mm overall) - 3 keyed	51
OA310.18	Astral Euro Double 40/40 (79mm overall) - 3 keyed	51
OA312.07	Astral Euro Cylinder & Turn 30/30 (59mm overall) - 3 keyed	51
OA312.13	Astral Euro Cylinder & Turn 35/35 (69mm overall) - 3 keyed	51
OA312.18	Astral Euro Cylinder & Turn 40/40 (79mm overall) - 3 keyed	51
OA3S1.07	Astral S Euro 30/30 (59mm Overall) -3 keyed	50
OA3S1.13	Astral S Euro Double 35/35 (69mm Overall) -3 keyed	50
OA3S1.18	Astral S Euro Double 40/40 (79mm Overall) -3 keyed	50
OA3S2.07	Astral S Euro Cylinder & Turn 30/30 (59mm Overall) -3 keyed	50
OA3S2.13	Astral S Euro Cylinder & Turn 35/35 (69mm Overall) -3 keyed	50
OA3S2.18	Astral S Euro Cylinder & Turn 40/40 (79mm Overall) -3 keyed	50
OG300.07	C2000 Euro Profile Double Cylinder	52
OG300.13	C2000 Euro Profile Double Cylinder	52
OG300.18	C2000 Euro Profile Double Cylinder	52
OG302.07	C2000 Euro Profile Double Cylinder & Turn	52
OG302.13	C2000 Euro Profile Double Cylinder	52
OG302.18	C2000 Euro Profile Double Cylinder	52
P1511	Roller Latch - 51mm	28
P159	Sashlock - 2 Lever 64mm Case	25
P1643	Deadlock - 3 Lever 64mm case	24
P1645	Deadlock - 5 Lever 64mm case	24
P1763	Deadlock - 3 Lever 76mm case	24
P1765	Deadlock - 5 Lever 76mm case	24
P2136	Rim Lock & Latch - 143mm Case	33
P2143	Rim Lock & Latch - 108mm Case	34
P2144	Rim Deadlock - 108mm Case	34
P2378	Sashlock - 2 Lever 76mm Case	25
P2643	Sashlock - 3 Lever 64mm Case	24
P2645	Sashlock - 5 Lever 64mm Case	24
P2763	Sashlock - 3 Lever 76mm Case	24
P2765	Sashlock - 5 Lever 76mm Case	24
P3708	Flat Mortice Latch - 64mm	27
P3709	Flat Mortice Latch - 76mm	27
P3721	Tubular Mortice Latch - 64mm	27
P3722	Tubular Mortice Latch - 79mm	27
P3722LK	Tubular Mortice Latch - 79mm	27
P3724LK	Tubular Mortice Latch - 95mm	27
P3751	Bathroom Lock - 64mm Case	26
P464	Rack Bolt & Key - 64mm 2 Bolts/1 Key Per Card	29
P465	Rack Bolt Key - 2 Per Card	29
P472	Knob Furniture – 51mm - Victorian - Domed	34
P5641	Deadlock - 5 Lever 64mm case to BS3621:2004	23
P5642	Sashlock - 5 Lever 64mm Case to BS3621:2004	23
P5761	Deadlock - 5 Lever 76mm case to BS3621:2004	23
P5762	Sashlock - 5 Lever 76mm Case to BS3621:2004	23
P61029BB	Hinge - 102mm - EN1935 Class 11 - Ball Bearing -1 1/2 Pairs	67
P626	Knob Furniture – 60mm - Victorian - Oval	34
P6769SSW	Hinge - 76mm Stainless Steel Washered - Polished Brass - 1 Pair	67
P68605	Hinge Bolt	30
P68615	Patio door lock white	29
P68616	Multi-purpose bolt white	29
P68617	Window Lock- snap Type White	30
P68618	Sash window bolt - 6 Per Pack	30
P68766	Door Stop - 76mm – Floor Mounted	67
P707	Switchable Deadlocking Nightlatch 73mm Case	32
P727	Switchable Deadlocking Nightlatch 89mm Case	32
P7643	Bathroom Lock	25
P766	Traditional Rim nightlatch 92mm Case	33
P7763	Bathroom Lock	25
P785	Switchable Deadlocking Nightlatch 69mm Case	32
P789	Switchable Deadlocking Nightlatch 99mm Case	32
P801	Single Cylinder - Euro Profile 46mm	52
P802	Double Cylinder - Euro Profile 35/35mm	52
P803	Cylinder & turn - Euro Profile 35/35mm	52
P805	Double Cylinder - Euro Profile 35/45mm	52
P806	Cylinder & Turn - Euro Profile 35/45mm	52
P816	Replacement Rim Cylinder	33
PSTL2	Power Supply 12VDC 1 Amp	75

Ingersoll Rand
Security Technologies



Performance Doorsets

Performance doorsets, marketed under the Martin Roberts brand, are made to suit individual requirements and finished in a wide range of colours and finishes, including advanced wood effect finishes. Special features such as vision panels, louvres and security protection enable our doors to be easily incorporated into the overall design of a building. Providing long life performance and improved life cycle costs, steel doors are increasingly being used as a viable and sustainable alternative to timber doors in all kinds of applications.



Automated Openings

Our automated openings, under the Dor-O-Matic brand, provide one of the widest choices of automatic doors and operators systems available and are widely used in commercial, sports & leisure, retail, education, transport and healthcare environments. Designed and manufactured to suit individual requirements, our full service package includes installation, service and maintenance.



Architectural Hardware

Manufacturers of the market leading Briton brand of door hardware, our range consists of door controls, door furniture, exit hardware, security cylinders and lockcases. Our product portfolio also includes Randi a range of design-led Scandinavian door furniture and accessories and Normbau, a versatile range of coloured nylon door and bathroom fittings.



Electronic Access Solutions

A worldwide leader in access control, time and attendance and personal identification products, we are uniquely positioned to supply a complete security package from cutting edge biometric solutions, through to networked and stand-alone electronic access control systems and mechanical locks. Our bespoke software and hardware designs under the Interflex brand provide solutions for time management, personnel scheduling, data capture, visitor management and access control applications.



Hotel Locking Systems

Under the CISA brand we design and manufacture range of hotel and electronic locking systems, utilising biometric, smart card and proximity technologies. The systems are approved and specified by major international and national hotel chains, as well as in the independent sector. All systems are supplied, installed and supported by a team of professional engineers.



Service

Ingersoll Rand offer an unrivalled year-round maintenance and repair service for automatic, manual and industrial doors along with their associated security systems, that will keep your premises open and with minimum disruption. A nationwide fleet of specialist engineers and dedicated call centre staff ensure a rapid response 24 hours, 7 days a week throughout the UK, providing total peace of mind.

www.security.ingersollrand.co.uk

Ingersoll Rand
Security Technologies

Ingersoll Rand Security Technologies is a leading global provider of products and services that make environments safe, secure and productive. The sector's market-leading products include electronic and biometric access control systems; time & attendance and personnel scheduling systems; mechanical locks and portable security; door controls, exit devices and architectural hardware; performance steel doorsets and automated openings; and other technologies and services for global security markets.

Progress is greener with Ingersoll Rand

In accordance with our Environmental policy, this brochure has been produced by a company accredited to ISO 14001 using a Carbon Neutral paper stock containing 50% post consumer waste and with a chain of custody certified to FSC approval.

Please recycle this brochure when you no longer need it.

Ingersoll Rand Security Technologies
Bescot Crescent Walsall West Midlands WS1 4DL
Tel. 01922 707400 *Fax.* 020 8612 1096 *Customer Care Centre Tel.* 08706 012012 *Customer Care Centre Fax.* 0800 834103
Email info@ingersollrand.co.uk **Web** security.ingersollrand.co.uk

Whilst Ingersoll Rand Security Technologies has taken every care to ensure the accuracy of information, data or advice contained in this literature, no liability in respect of such information or advice, whether given negligently or not, can be accepted by the company. Ingersoll Rand retains the right to amend the technical specification of any range of equipment shown without prior notice.

© 2009 Ingersoll Rand Company Limited / MB0080